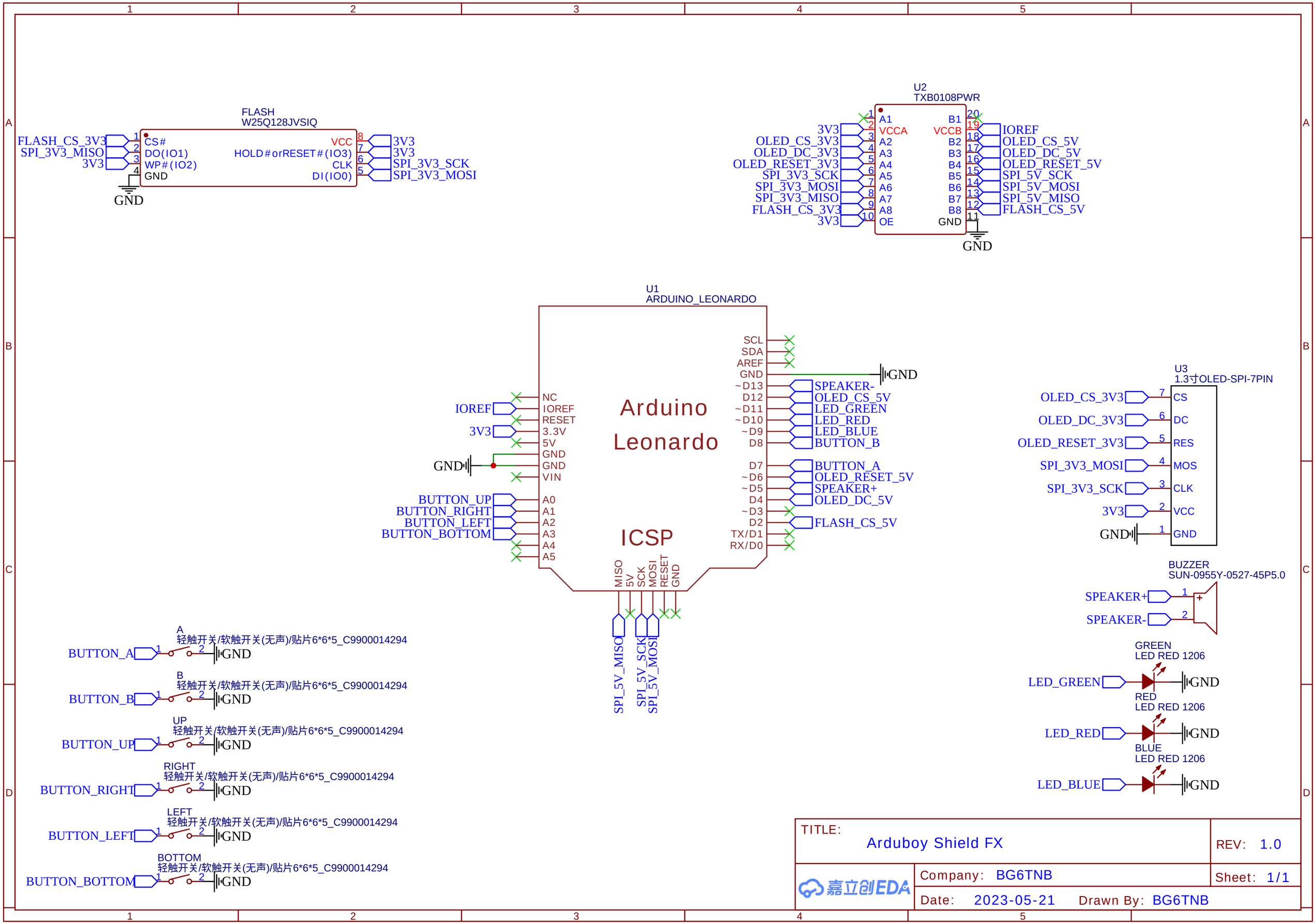
FLASH
W25Q128JVSIQ
FLASH_CS_3V3
SPI_3V3_MISO
3V3
CS#
DO(IO1)
WP#(IO2)
GND
VCC
HOLD#orRESET#(IO3)
CLK
DI(IO0)
3V3
3V3
SPI_3V3_SCK
SPI_3V3_MOSI
GND
U2
TXB0108PWR
A1
VCCA
A2
A3
A4
A5
A6
A7
A8
OE
B1
VCCB
B2
B3
B4
B5
B6
B7
B8
GND
3V3
OLED_CS_3V3
OLED_DC_3V3
OLED_RESET_3V3
SPI_3V3_SCK
SPI_3V3_MOSI
SPI_3V3_MISO
FLASH_CS_3V3
3V3
IOREF
OLED_CS_5V
OLED_DC_5V
OLED_RESET_5V
SPI_5V_SCK
SPI_5V_MOSI
SPI_5V_MISO
FLASH_CS_5V
GND
U1
ARDUINO_LEONARDO
Arduino
Leonardo
NC
IOREF
RESET
3.3V
5V
GND
GND
VIN
A0
A1
A2
A3
A4
A5
IOREF
3V3
GND
BUTTON_UP
BUTTON_RIGHT
BUTTON_LEFT
BUTTON_BOTTOM
SCL
SDA
AREF
GND
~D13
D12
~D11
~D10
~D9
D8
D7
~D6
~D5
D4
~D3
D2
TX/D1
RX/D0
GND
SPEAKER-
OLED_CS_5V
LED_GREEN
LED_RED
LED_BLUE
BUTTON_B
BUTTON_A
OLED_RESET_5V
SPEAKER+
OLED_DC_5V
FLASH_CS_5V
ICSP
MISO
5V
SCK
MOSI
RESET
GND
SPI_5V_MISO
SPI_5V_SCK
SPI_5V_MOSI
U3
1.3寸OLED-SPI-7PIN
OLED_CS_3V3
OLED_DC_3V3
OLED_RESET_3V3
SPI_3V3_MOSI
SPI_3V3_SCK
3V3
GND
CS
DC
RES
MOS
CLK
VCC
GND
BUZZER
SUN-0955Y-0527-45P5.0
SPEAKER+
SPEAKER-
GREEN
LED RED 1206
LED_GREEN
GND
RED
LED RED 1206
LED_RED
GND
BLUE
LED RED 1206
LED_BLUE
GND
A
轻触开关/软触开关(无声)/贴片6*6*5_C9900014294
BUTTON_A
GND
B
轻触开关/软触开关(无声)/贴片6*6*5_C9900014294
BUTTON_B
GND
UP
轻触开关/软触开关(无声)/贴片6*6*5_C9900014294
BUTTON_UP
GND
RIGHT
轻触开关/软触开关(无声)/贴片6*6*5_C9900014294
BUTTON_RIGHT
GND
LEFT
轻触开关/软触开关(无声)/贴片6*6*5_C9900014294
BUTTON_LEFT
GND
BOTTOM
轻触开关/软触开关(无声)/贴片6*6*5_C9900014294
BUTTON_BOTTOM
GND
TITLE:
Arduboy Shield FX
REV: 1.0
Company: BG6TNB
Sheet: 1/1
Date: 2023-05-21
Drawn By: BG6TNB
嘉立创EDA