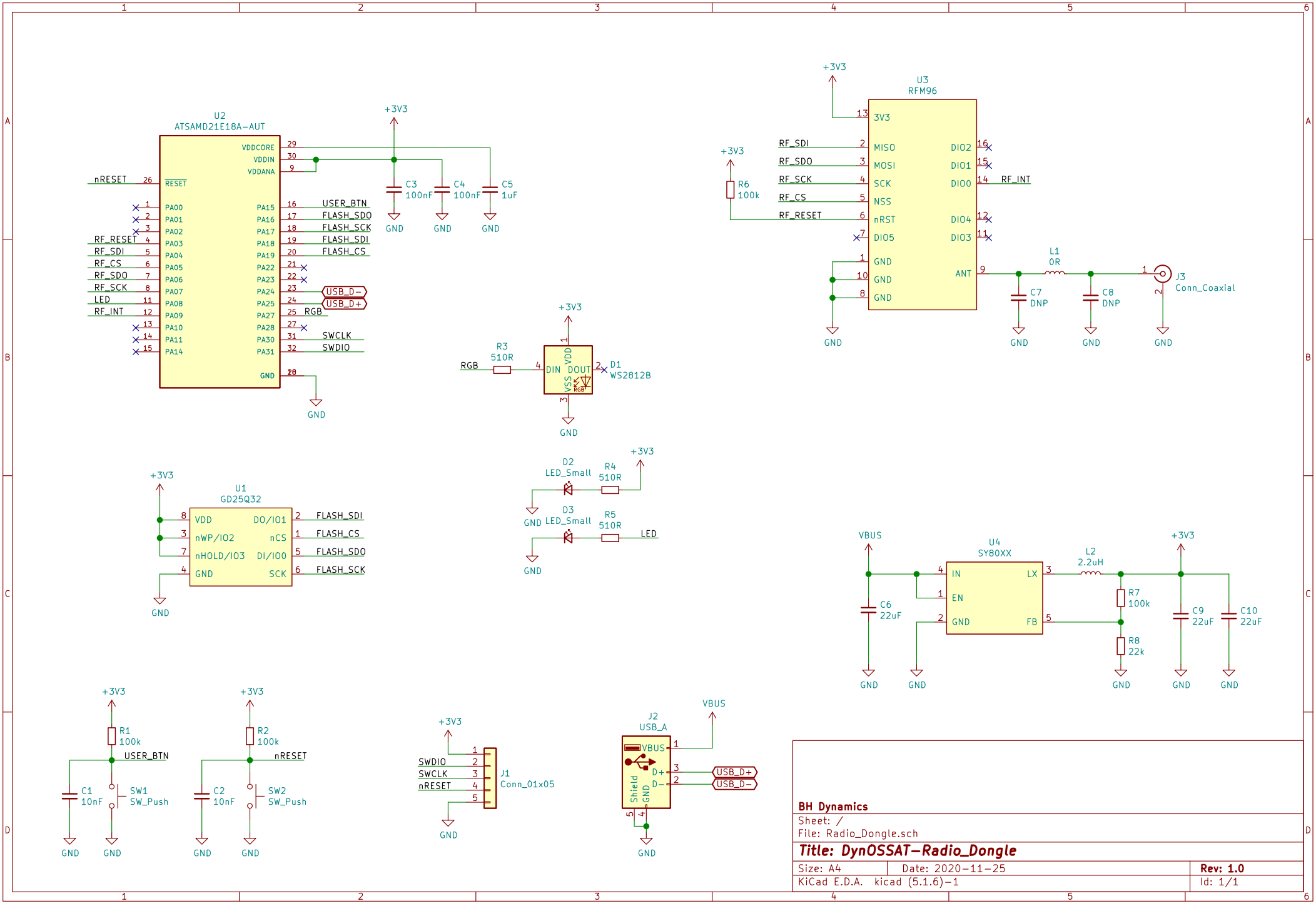
U2
ATSAMD21E18A-AUT
VDDCORE
VDDIN
VDDANA
RESET
PA00
PA01
PA02
PA03
PA04
PA05
PA06
PA07
PA08
PA09
PA10
PA11
PA14
PA15
PA16
PA17
PA18
PA19
PA22
PA23
PA24
PA25
PA27
PA28
PA30
PA31
GND
nRESET
RF_RESET
RF_SDI
RF_CS
RF_SDO
RF_SCK
LED
RF_INT
USER_BTN
FLASH_SDO
FLASH_SCK
FLASH_SDI
FLASH_CS
USB_D-
USB_D+
RGB
SWCLK
SWDIO
+3V3
C3
100nF
C4
100nF
C5
1uF
U3
RFM96
3V3
MISO
MOSI
SCK
NSS
nRST
DIO5
DIO2
DIO1
DIO0
DIO4
DIO3
ANT
R6
100k
L1
0R
C7
DNP
C8
DNP
J3
Conn_Coaxial
R3
510R
DIN
DOUT
VDD
VSS
D1
WS2812B
U1
GD25Q32
VDD
nWP/IO2
nHOLD/IO3
DO/IO1
nCS
DI/IO0
SCK
D2
LED_Small
R4
510R
D3
LED_Small
R5
510R
U4
SY80XX
IN
EN
LX
FB
VBUS
C6
22uF
L2
2.2uH
R7
100k
R8
22k
C9
22uF
C10
22uF
R1
100k
C1
10nF
SW1
SW_Push
R2
100k
C2
10nF
SW2
SW_Push
J1
Conn_01x05
J2
USB_A
Shield
BH Dynamics
Sheet: /
File: Radio_Dongle.sch
Title: DynOSSAT-Radio_Dongle
Size: A4
Date: 2020-11-25
Rev: 1.0
KiCad E.D.A. kicad (5.1.6)-1
Id: 1/1