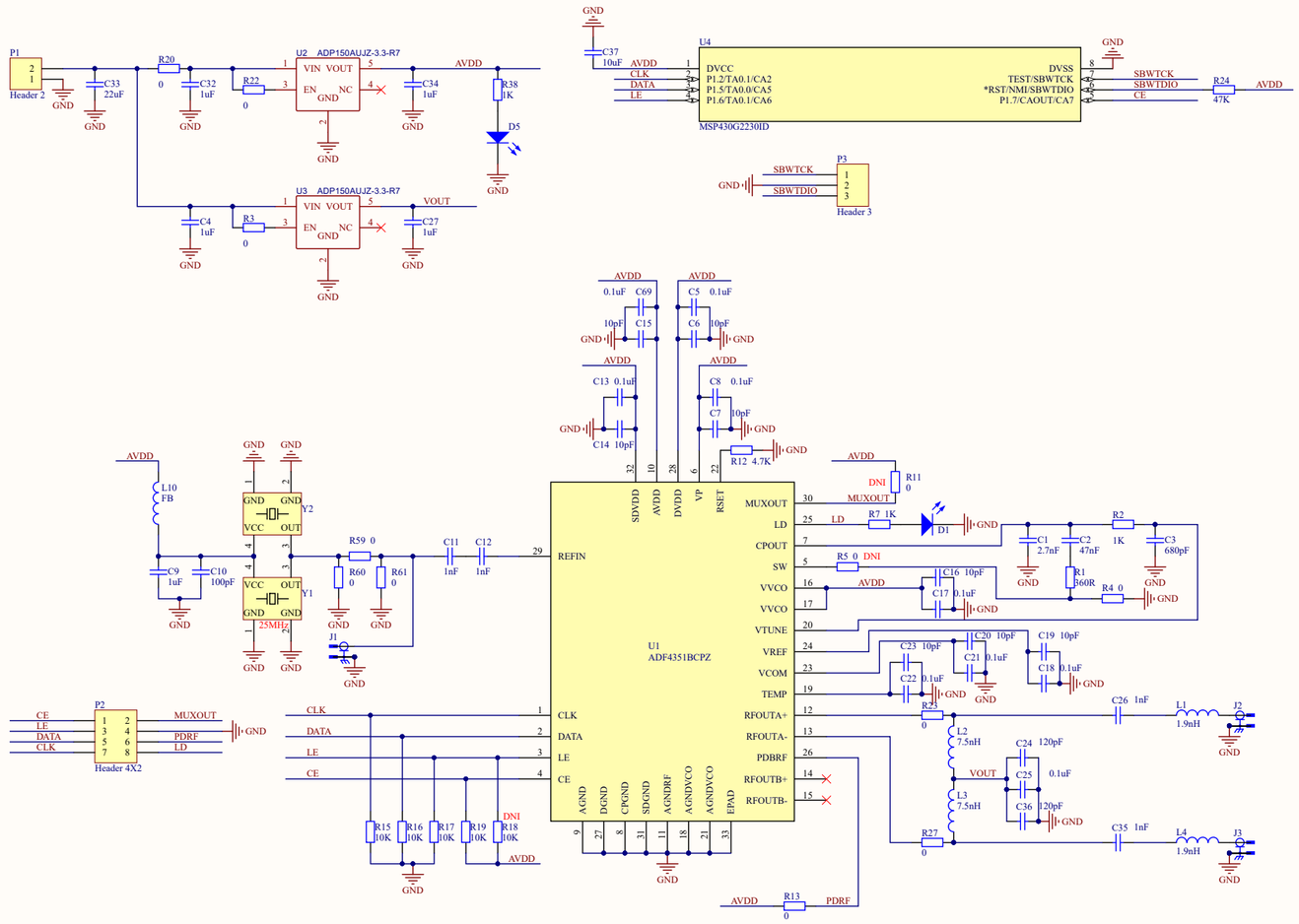

Title		
Size A3	Number	Revision
Date: 2022/3/20		Sheet of
File: C:\Users\..\ADF4351_PLL.SchDoc		Drawn By:

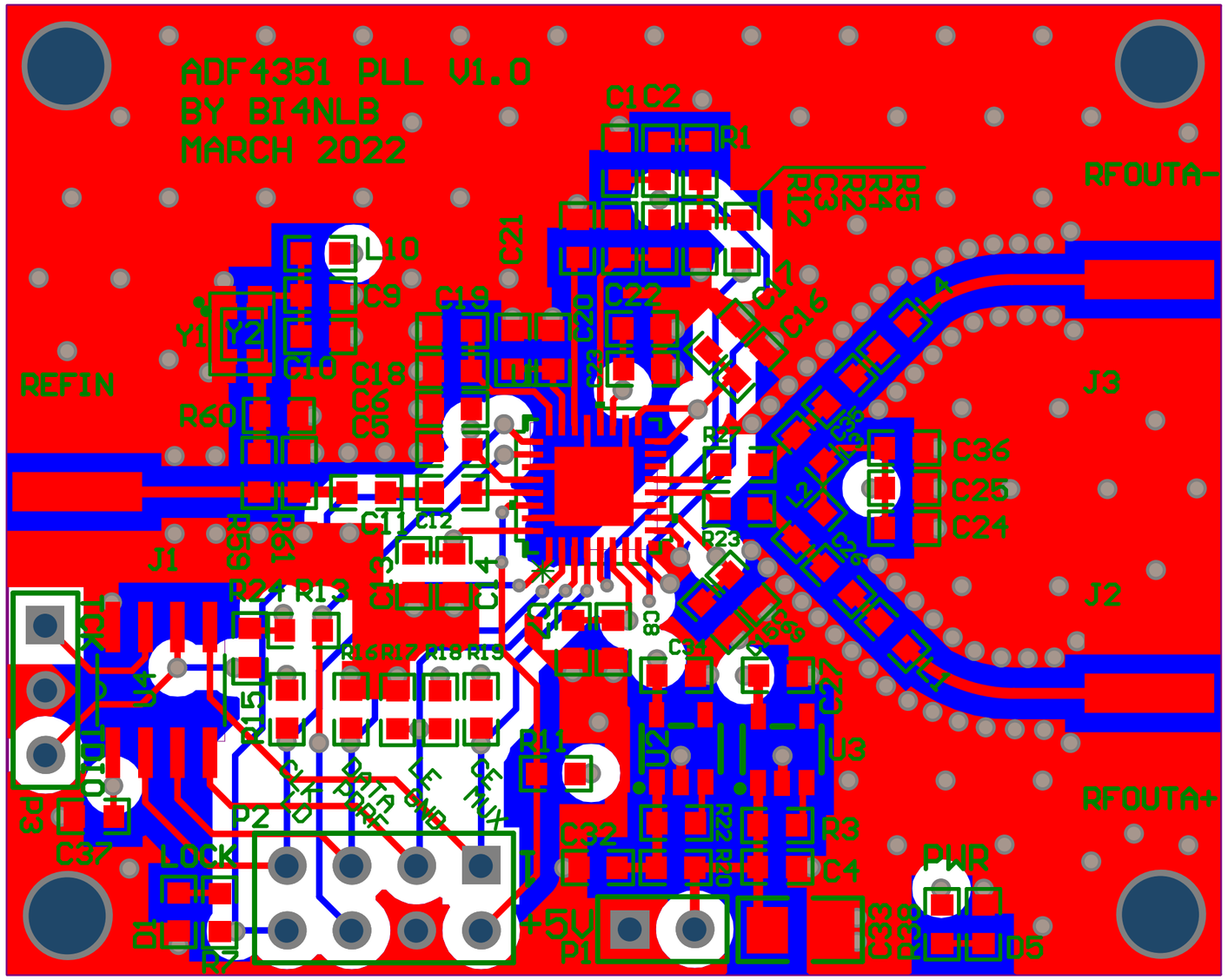
ADF4351 PLL V1.0
BY BI4NLB
MARCH 2022
RFOUTA-
RFOUTA+
REFIN
J1
J2
J3
P1
P2
+5V
LOCK
PWR
U3
C1
C2
R1
L10
C9
C10
C18
C19
C20
C21
C22
C6
C5
C11
C12
C36
C25
C24
C37
C32
C34
C4
R3
R7
R60
R24
R13
R16
R17
R18
R15
R11
R27
R23
D5