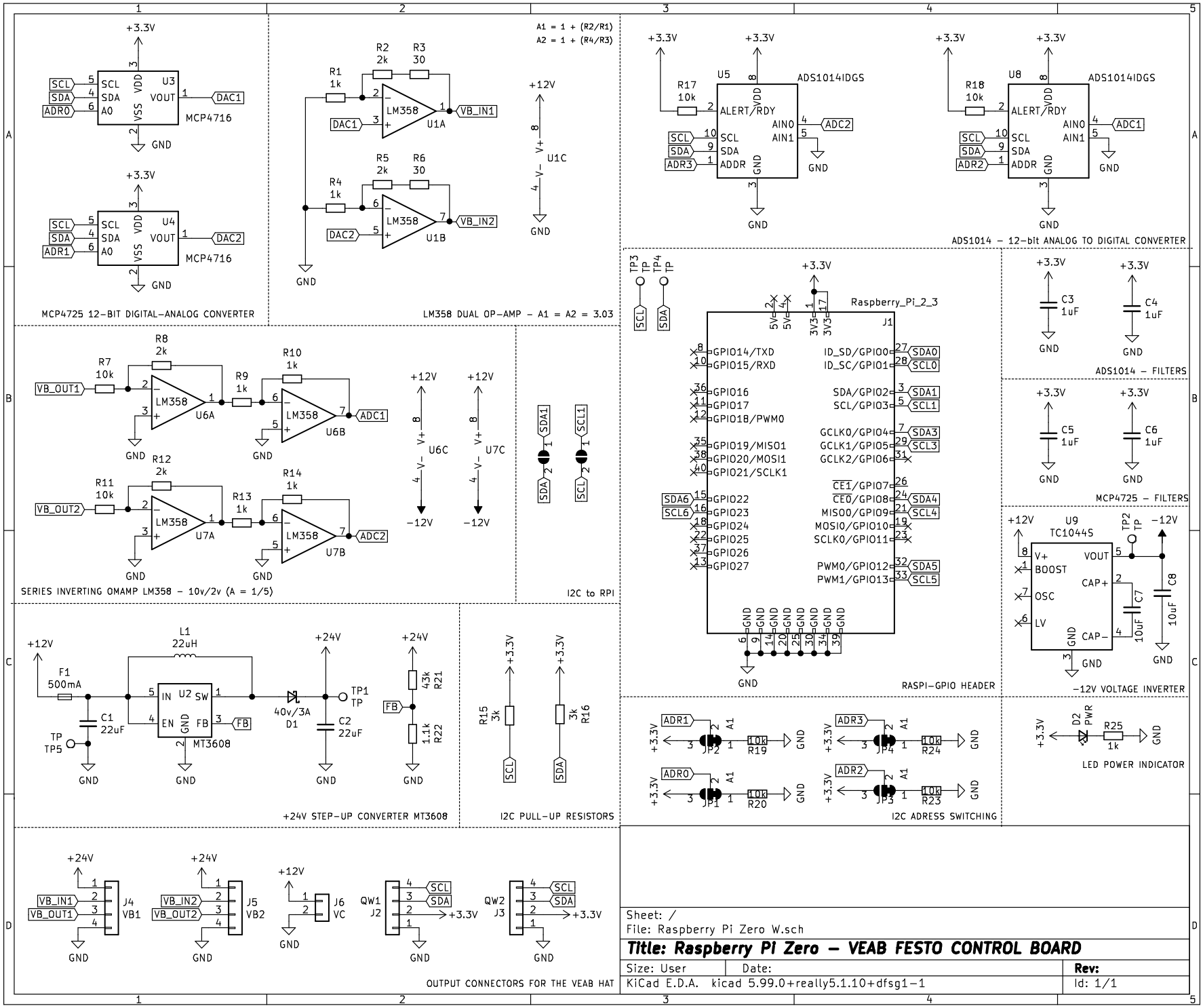
MCP4725 12-BIT DIGITAL-ANALOG CONVERTER
MCP4716
LM358 DUAL OP-AMP - A1 = A2 = 3.03
A1 = 1 + (R2/R1)
A2 = 1 + (R4/R3)
ADS1014 - 12-bit ANALOG TO DIGITAL CONVERTER
ADS1014IDGS
SERIES INVERTING OMAMP LM358 - 10v/2v (A = 1/5)
I2C to RPI
Raspberry_Pi_2_3
RASPI-GPIO HEADER
ADS1014 - FILTERS
MCP4725 - FILTERS
TC1044S
-12V VOLTAGE INVERTER
+24V STEP-UP CONVERTER MT3608
MT3608
I2C PULL-UP RESISTORS
I2C ADRESS SWITCHING
LED POWER INDICATOR
OUTPUT CONNECTORS FOR THE VEAB HAT
Sheet: /
File: Raspberry Pi Zero W.sch
Title: Raspberry Pi Zero - VEAB FESTO CONTROL BOARD
Size: User
Date:
Rev:
KiCad E.D.A. kicad 5.99.0+really5.1.10+dfsg1-1
Id: 1/1