Brian Leahy ASSIGNMENT 5 17372896

Q1.

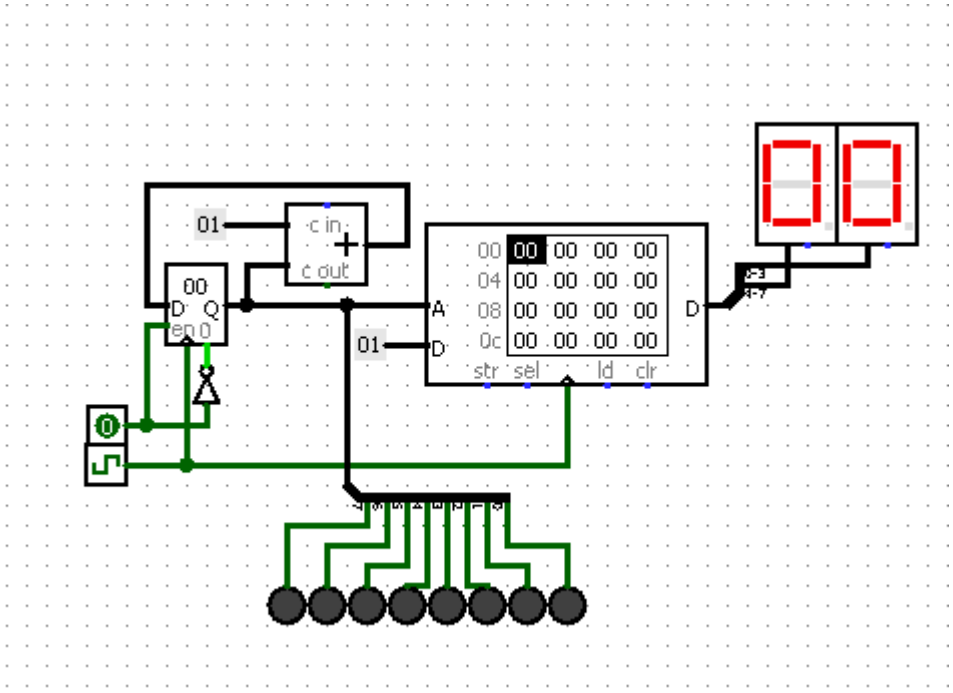

Q2.

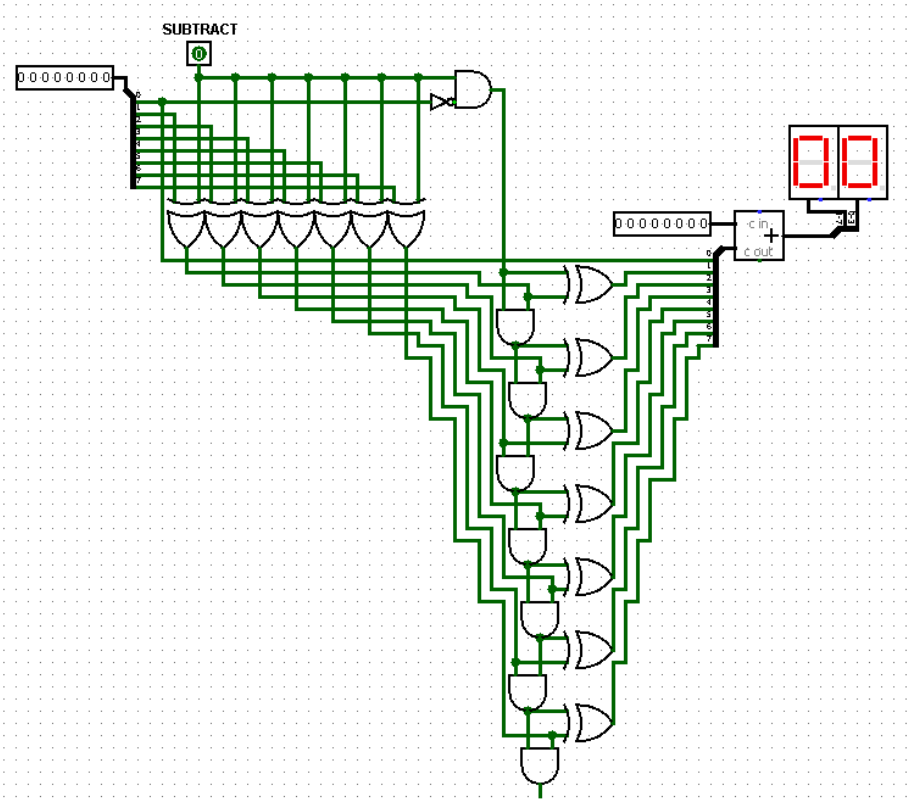

Q3.

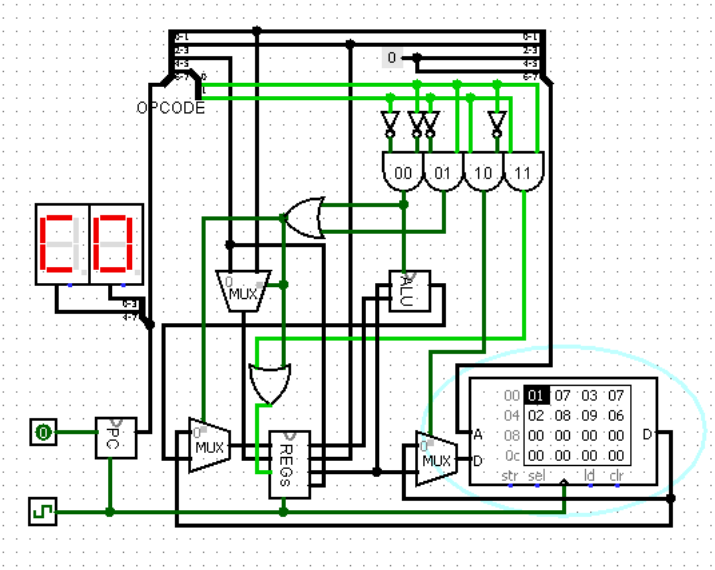
OPCODE
00
01
10
11
MUX
ALU
PC
REGS
MUX
MUX
A
D
str
sel
ld
clr

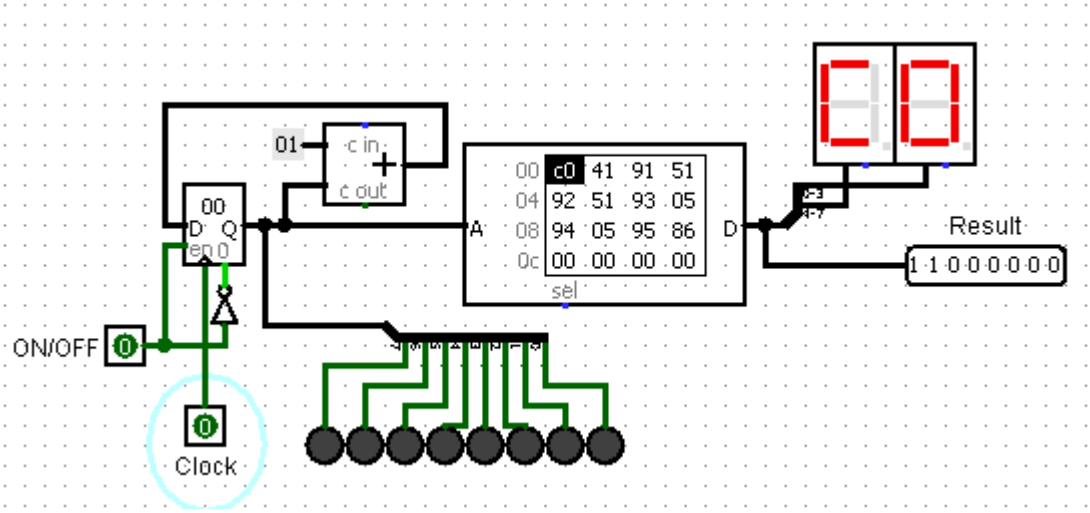
01
c in
c out
00
D
Q
en
A
D
sel
Result
ON/OFF
Clock

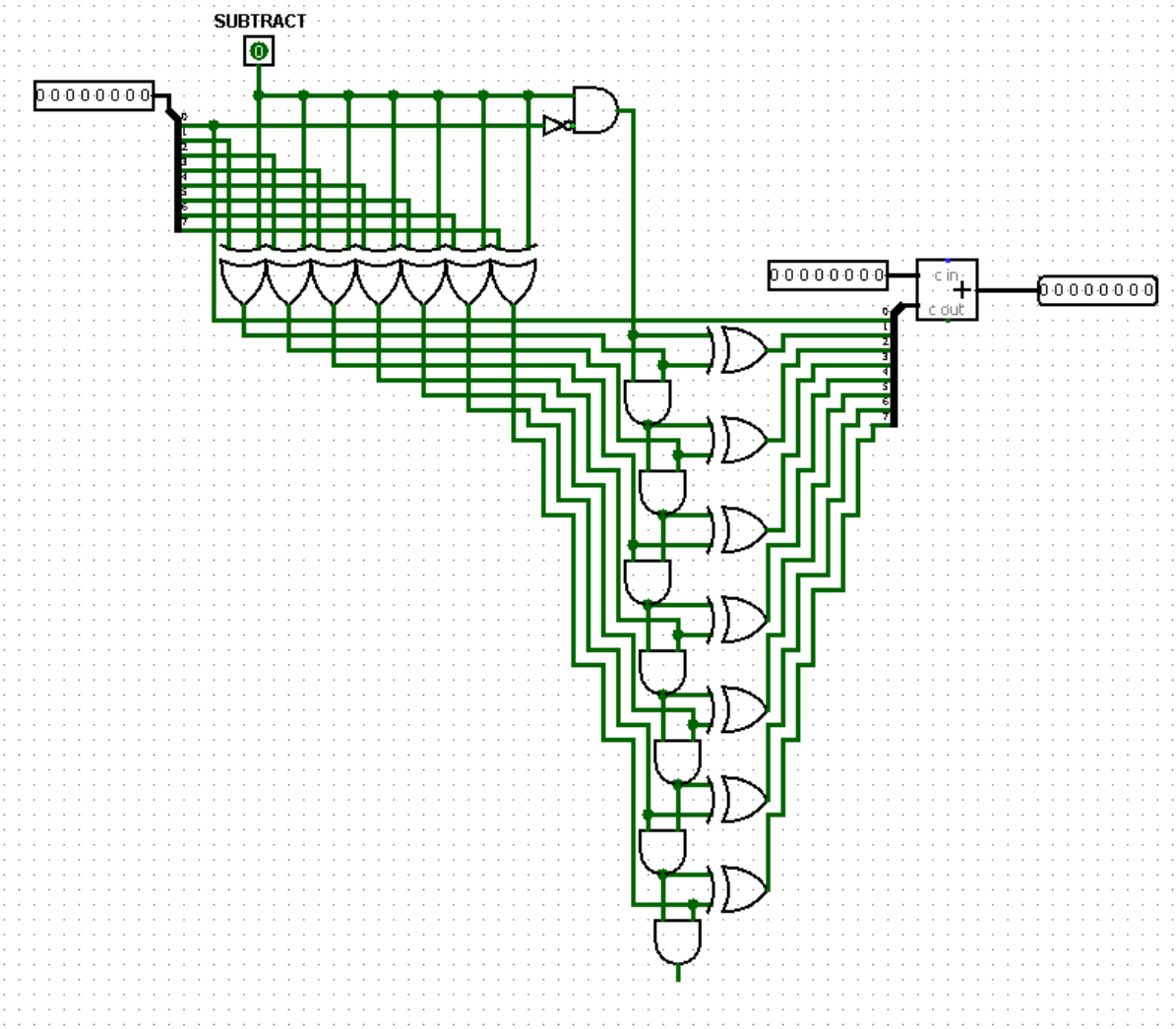

Q4. A) Code takes value stored in 00 in memory as x.

Machine Code: 11000000 01000001 10010001 01010001 10010010 01010001
10010011 00000101 10010100 00000101 10010101 10000110

Hex Code: c041 9151 9251 9305 9405 9586

Assembly Code:
```
lb $zero, 0x0000
add $t0, $zero, $zero
sb $t0, 0x0001
add $t0, $zero, $t0
sb $t0, 0x0010
add $t0, $zero, $t0
sb $t0, 0x0011
sub $t0, $t0, $zero
sb $t0, 0x0100
sub $t0, $t0, $zero
sb $t0, 0x0101
sb $zero, 0x0110
```

Final Result with my student number stored in data ram: 1,2,3,4,3,2,1,6

(My student number is 17372896)

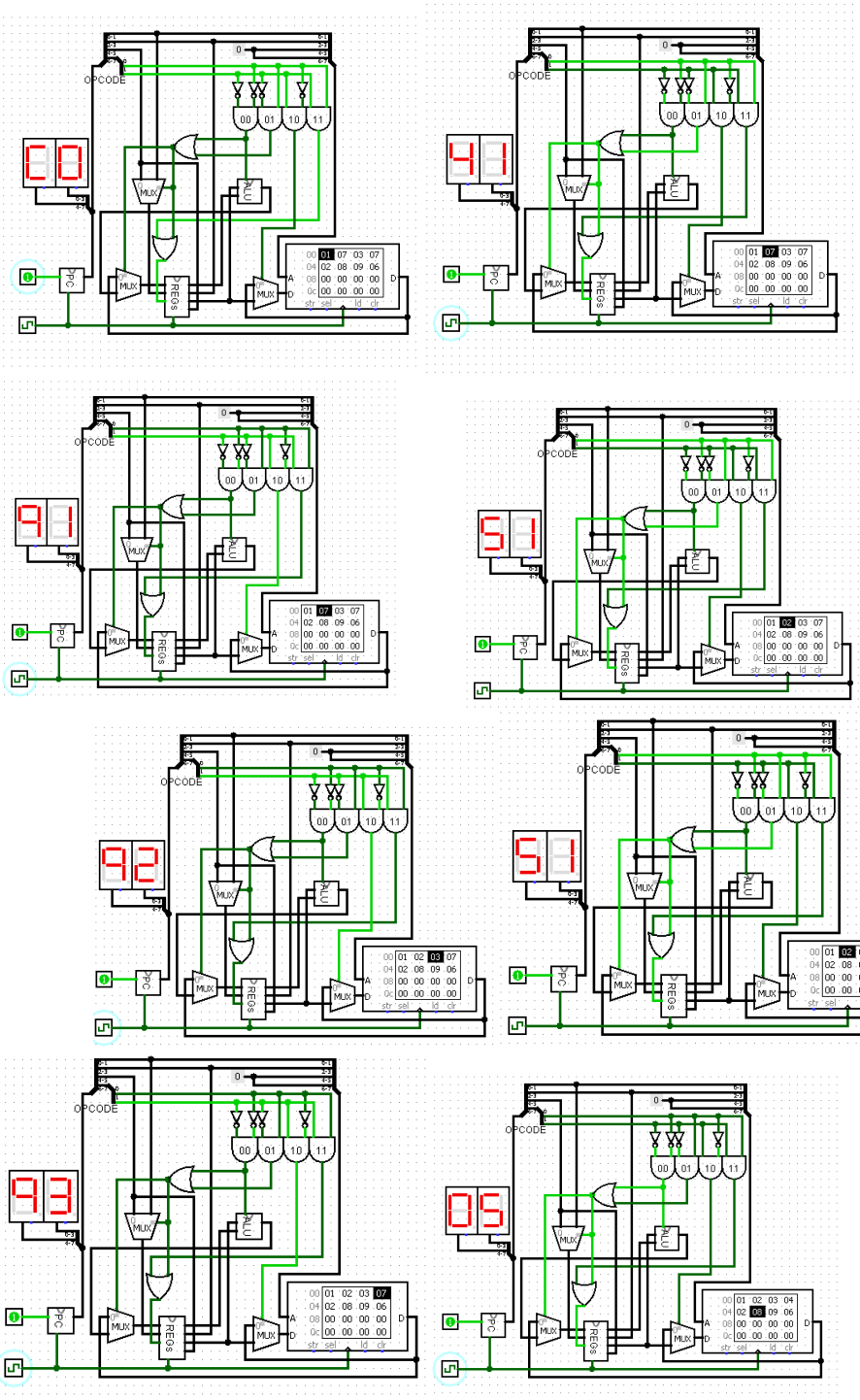

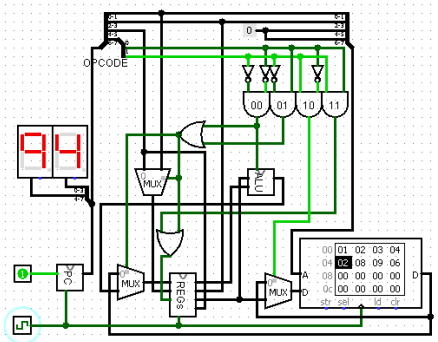
94
OPCODE
MUX
ALU
PC
REGs
00 01 10 11
00 01 02 03 04
04 02 08 09 06
08 00 00 00 00
0c 00 00 00 00
str sel ld clr

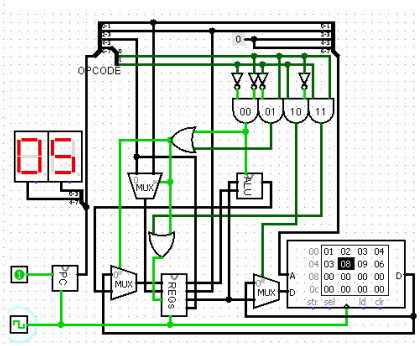
05
OPCODE
MUX
ALU
PC
REGs
00 01 10 11
00 01 02 03 04
04 03 08 09 06
08 00 00 00 00
0c 00 00 00 00
str sel ld clr

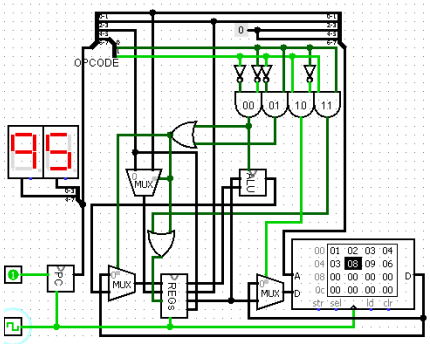
95
OPCODE
MUX
ALU
PC
REGs
00 01 10 11
00 01 02 03 04
04 03 08 09 06
08 00 00 00 00
0c 00 00 00 00
str sel ld clr

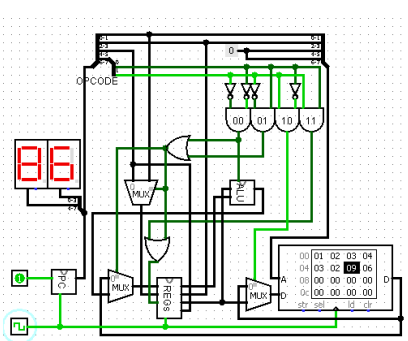
86
OPCODE
MUX
ALU
PC
REGs
00 01 10 11
00 01 02 03 04
04 03 02 09 06
08 00 00 00 00
0c 00 00 00 00
str sel ld clr

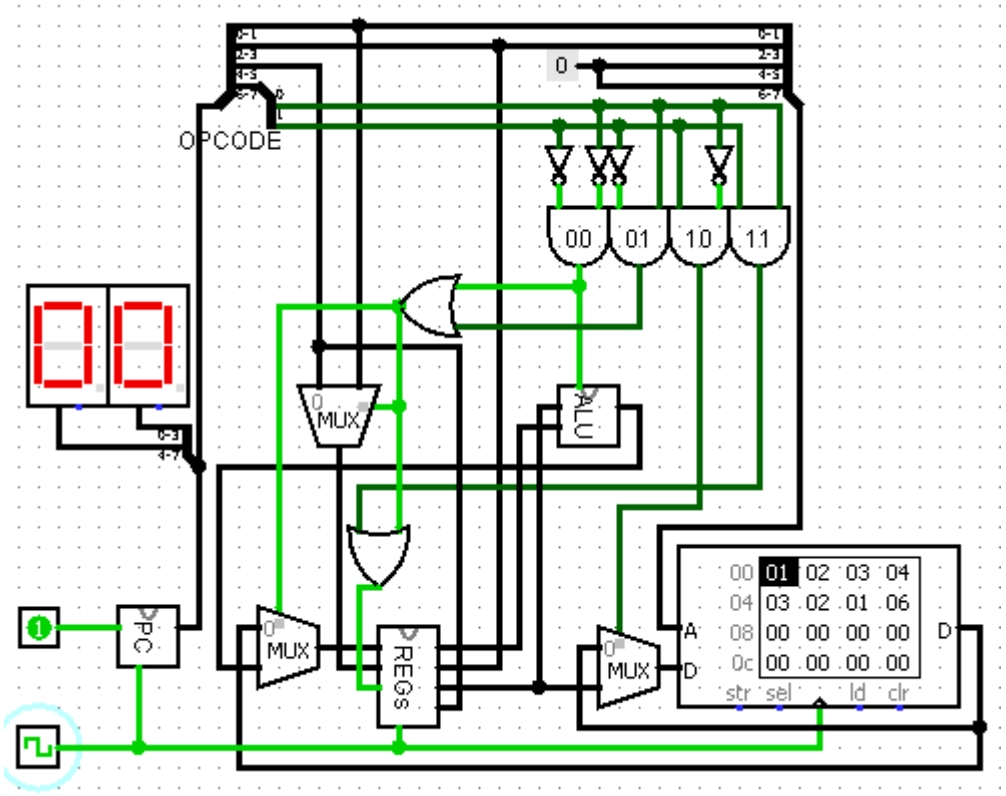
00
OPCODE
0
00 01 10 11
MUX
ALU
PC
REGs
00 01 02 03 04
04 03 02 01 06
08 00 00 00 00
0c 00 00 00 00
A
D
str sel ld clr