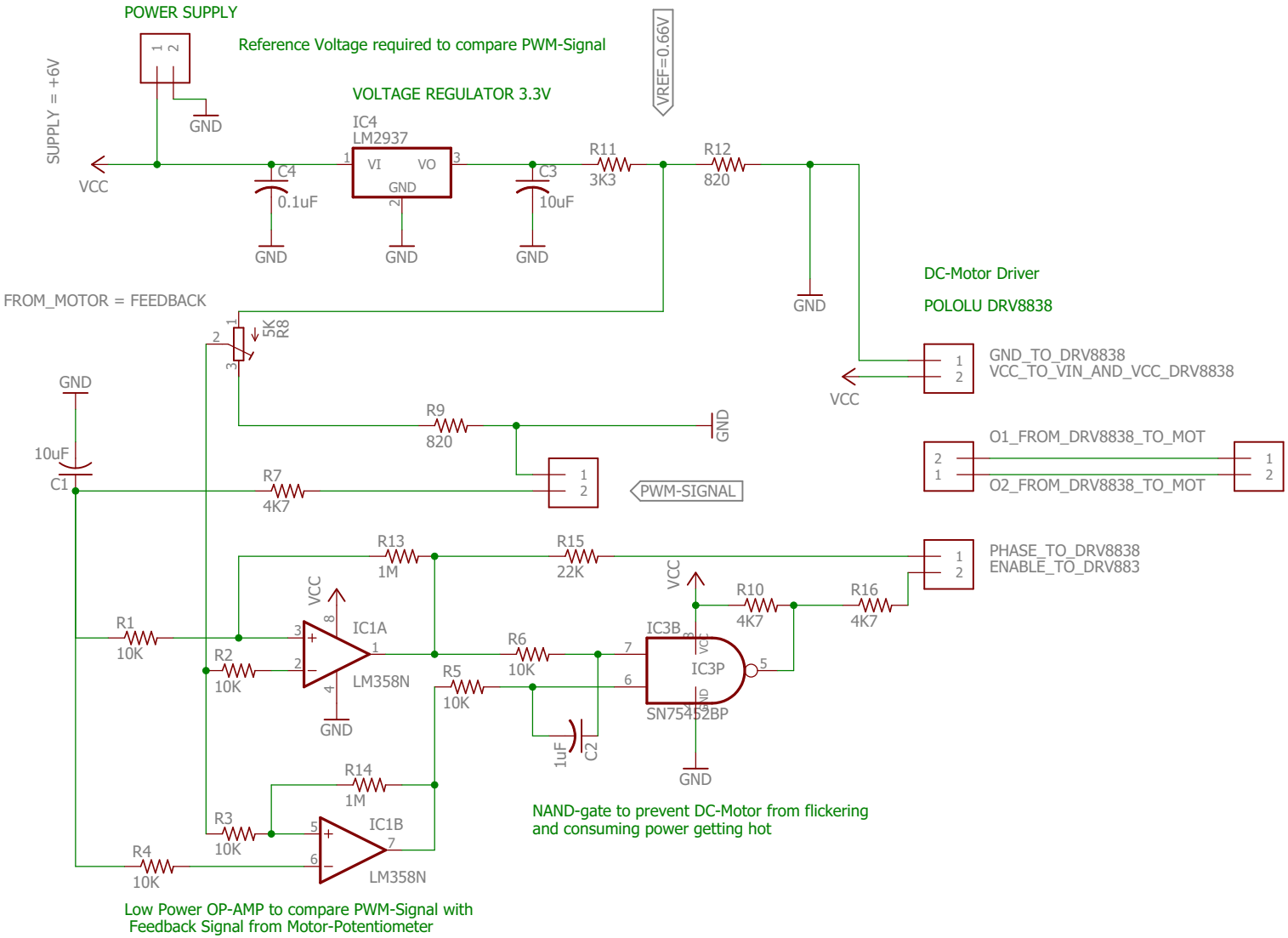
POWER SUPPLY
Reference Voltage required to compare PWM-Signal
VREF=0.66V
SUPPLY = +6V
VOLTAGE REGULATOR 3.3V
IC4
LM2937
VI
VO
GND
VCC
C4
0.1uF
C3
10uF
R11
3K3
R12
820
DC-Motor Driver
POLOLU DRV8838
FROM_MOTOR = FEEDBACK
5K
R8
GND_TO_DRV8838
VCC_TO_VIN_AND_VCC_DRV8838
R9
820
10uF
C1
R7
4K7
PWM-SIGNAL
O1_FROM_DRV8838_TO_MOT
O2_FROM_DRV8838_TO_MOT
R13
1M
R15
22K
PHASE_TO_DRV8838
ENABLE_TO_DRV883
R10
4K7
R16
4K7
R1
10K
R2
10K
IC1A
LM358N
R6
10K
R5
10K
IC3B
IC3P
SN75452BP
1uF
C2
R14
1M
R3
10K
R4
10K
IC1B
LM358N
NAND-gate to prevent DC-Motor from flickering
and consuming power getting hot
Low Power OP-AMP to compare PWM-Signal with
Feedback Signal from Motor-Potentiometer