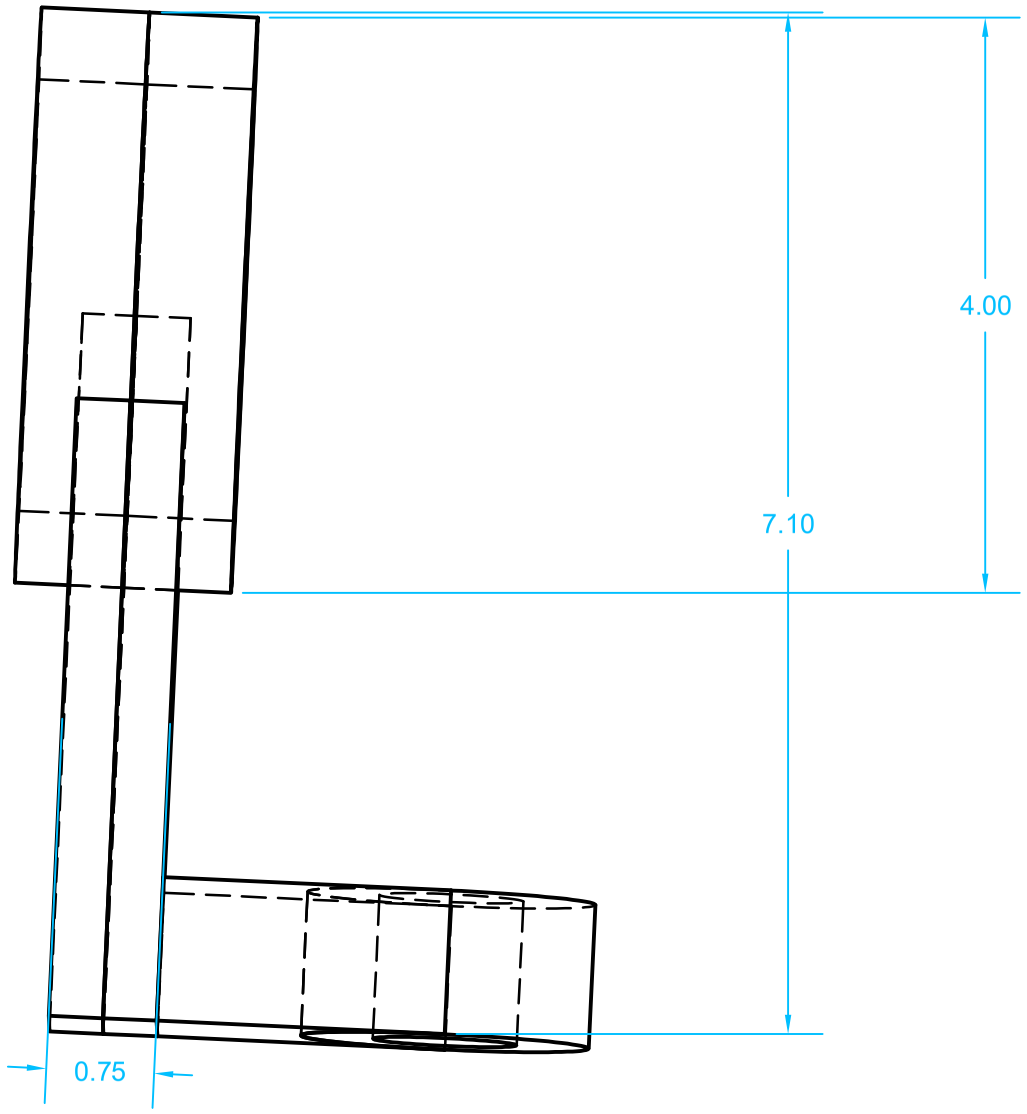

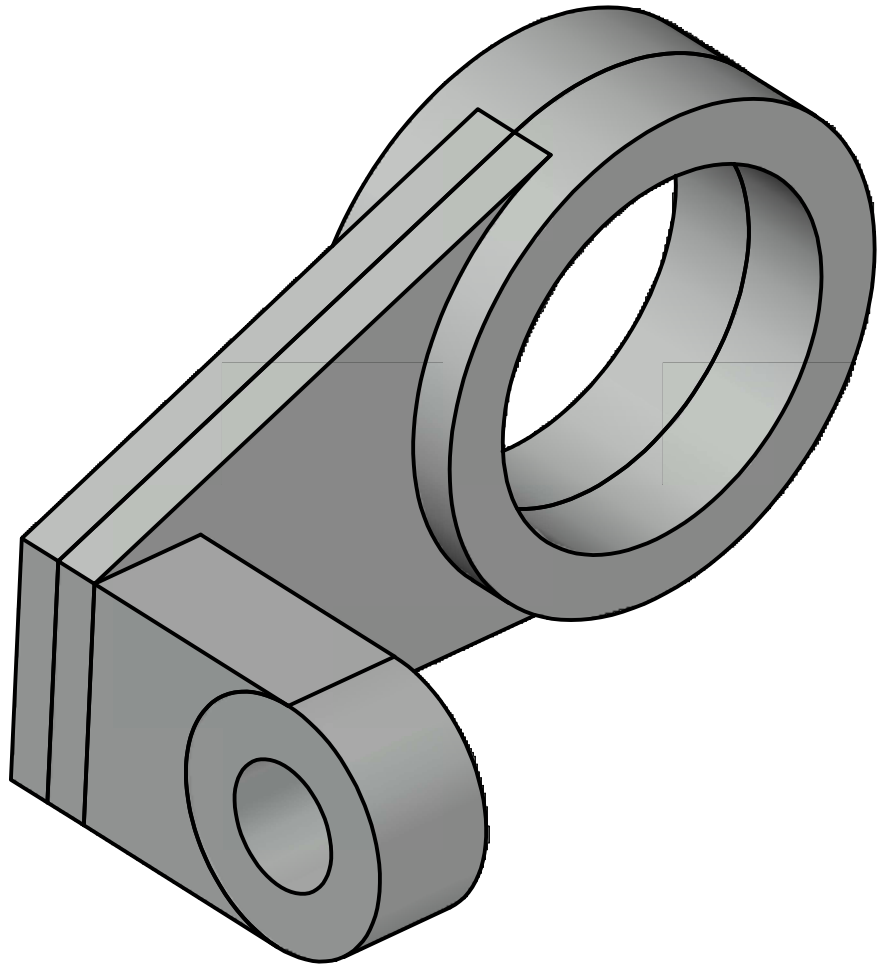

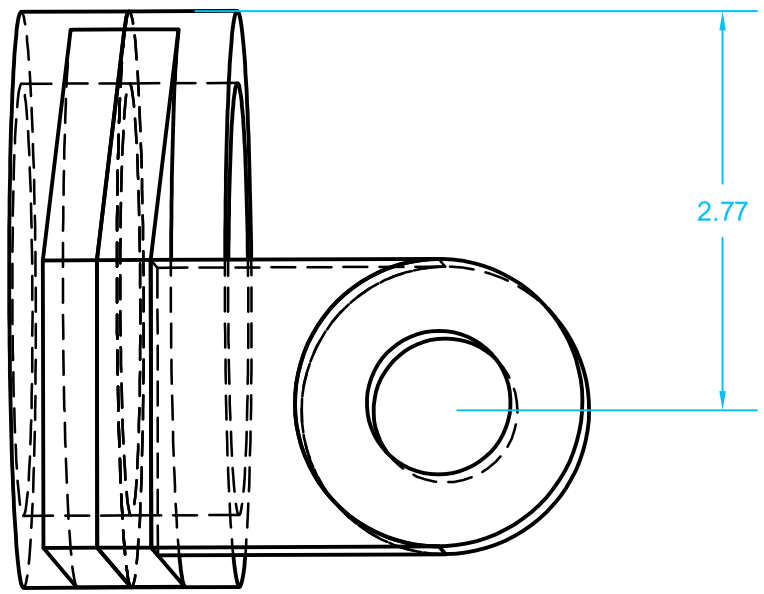

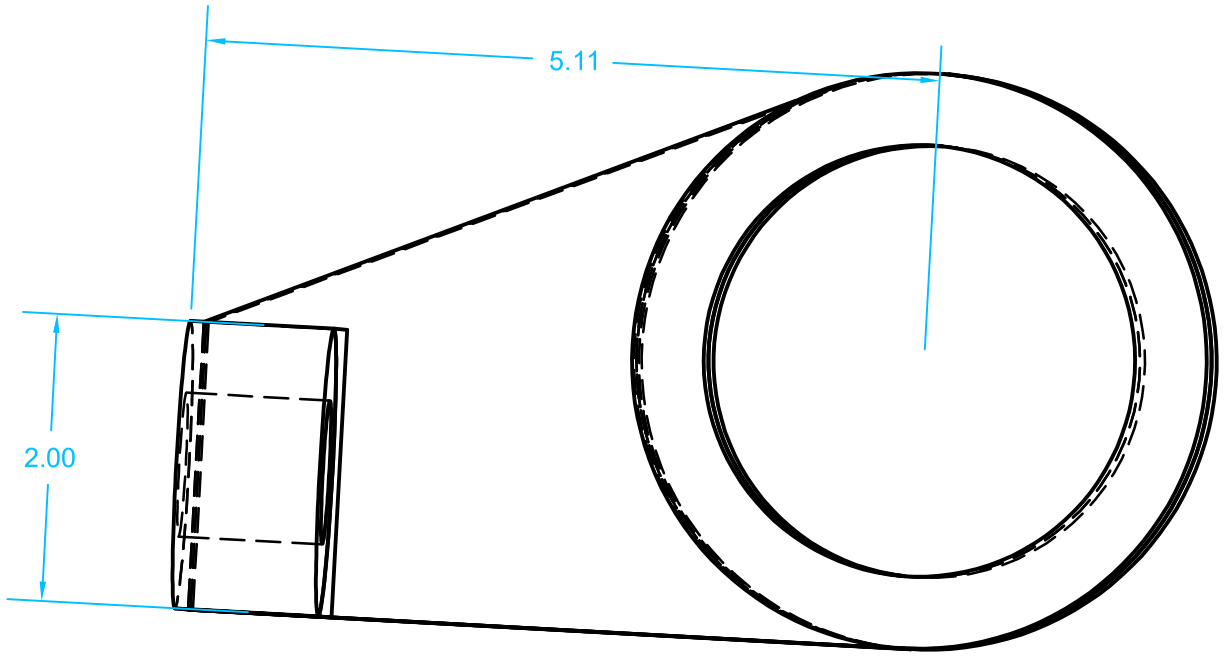

Blesson **inches** 10/16/2024 A3	**DRWG8071** **CONESTOGA**	Drawing1