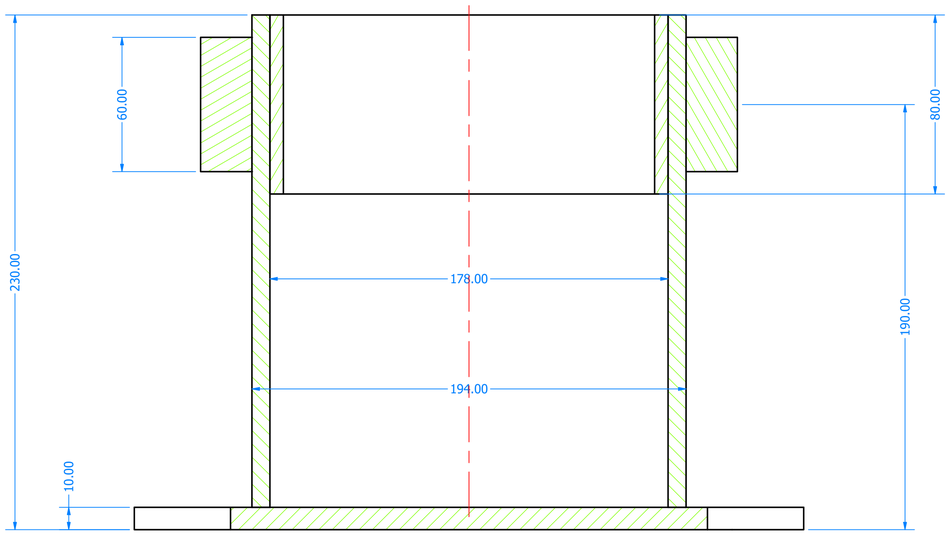

SECTION A-A
SCALE 3/4

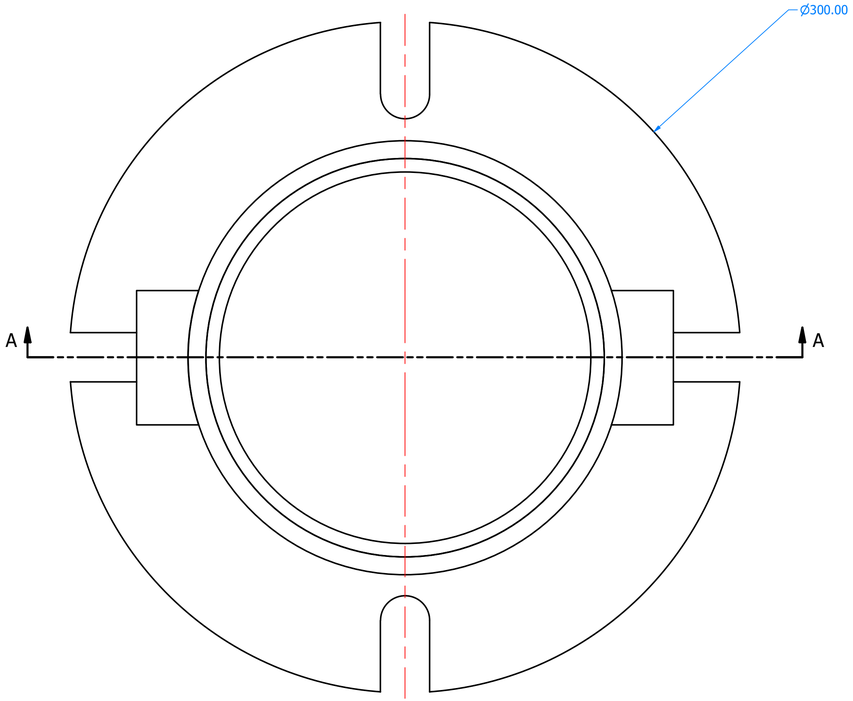

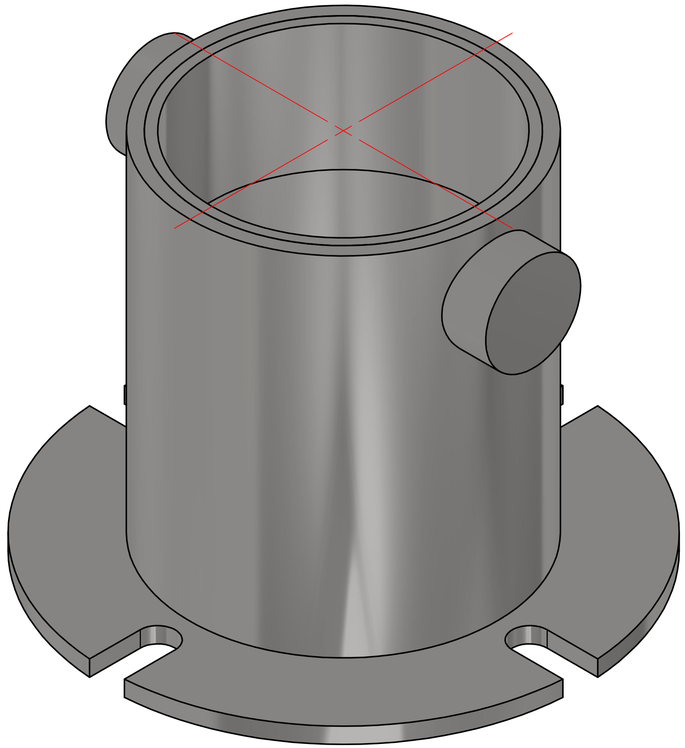

D mm	Author: bless Date: 2025-03-25 weldements2.iam Material: Welded Aluminum-6061
Scale: 3/4	1 / 2

CONESTOGA
Connect Life and Learning

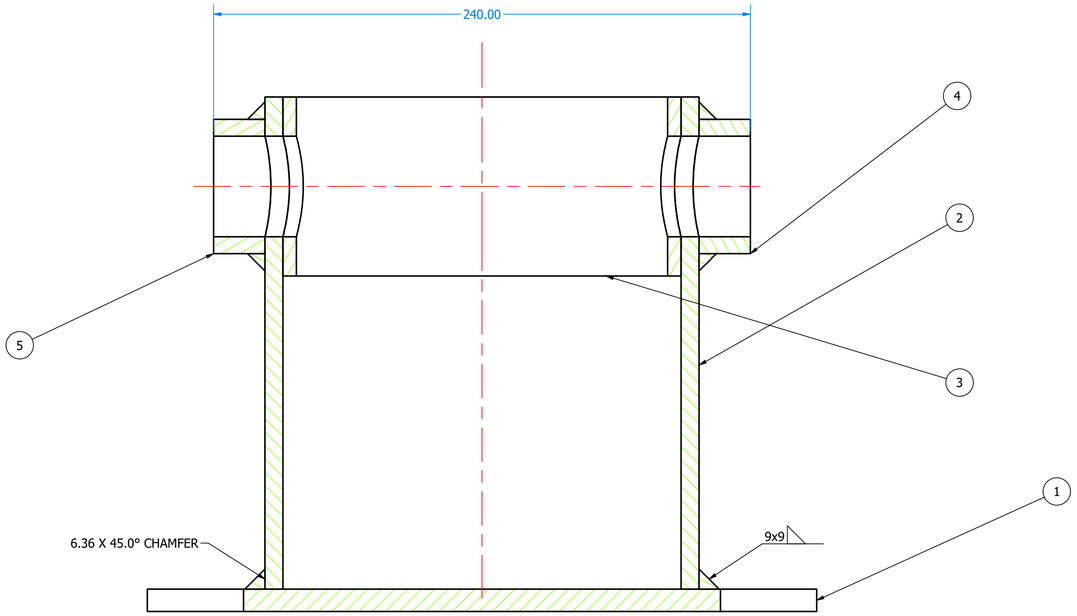

SECTION B-B
SCALE 3/4

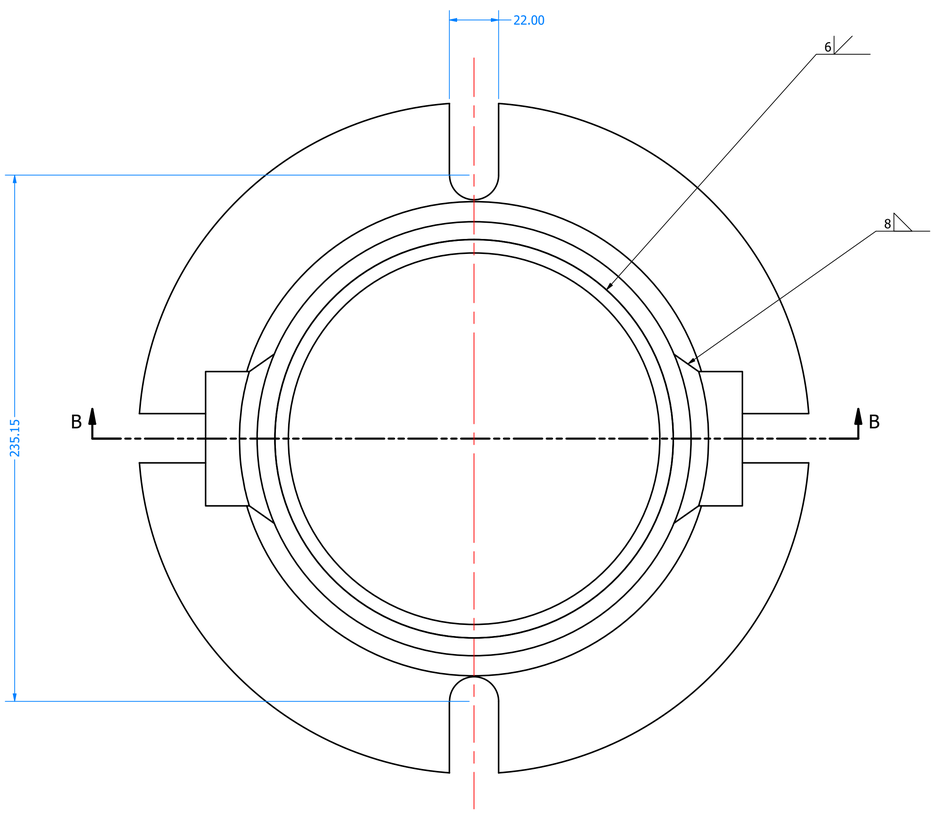

PARTS LIST			
ITEM	QTY	PART NUMBER	MATERIAL
1	1	base	Steel, Mild
2	1	cylinder1	Steel, Mild
3	1	Part6	Steel, Mild
4	1	Part7	Steel, Mild

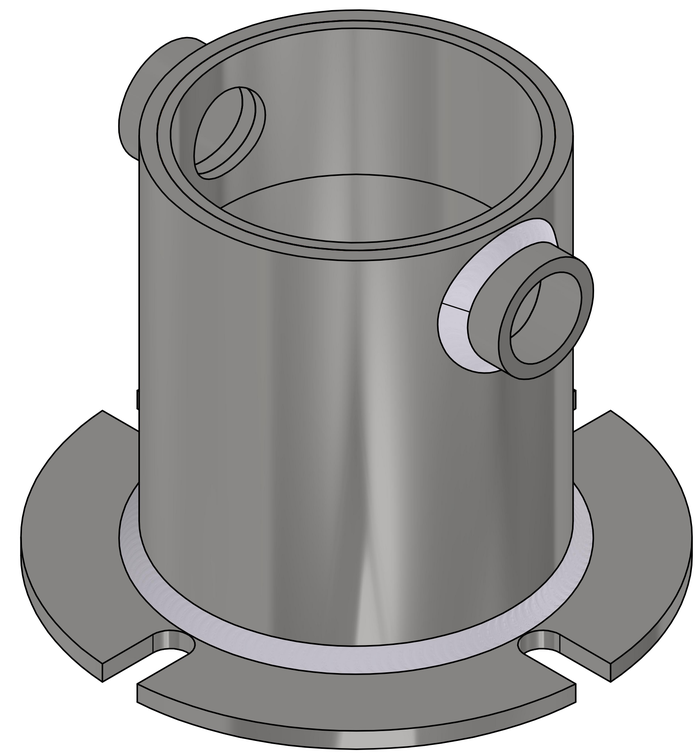

D
mm

Author: bless
Date: 2025-03-25
weldements2.iam
Material: Welded Aluminum-6061

CONESTOGA
Connect Life and Learning

Scale: 3/4