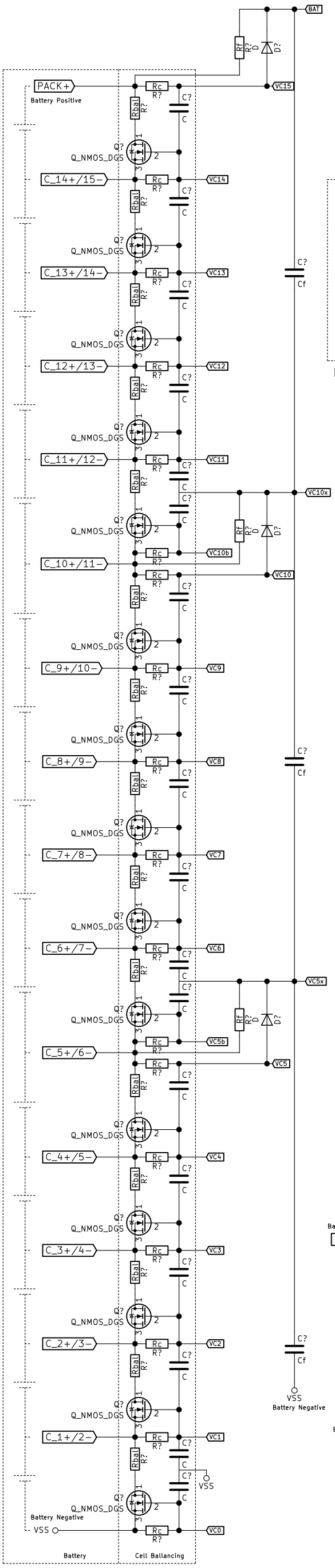

Battery Monitoring

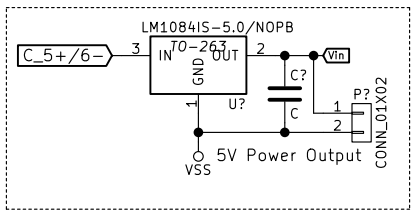

5V Voltage Regulator Circuit

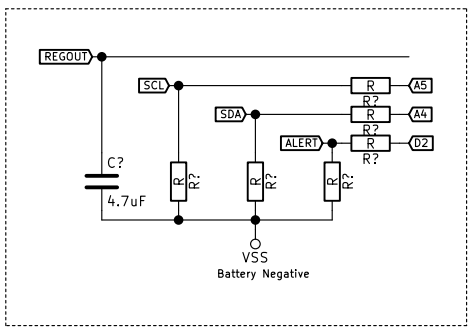

Microcontroller Communication Circuit

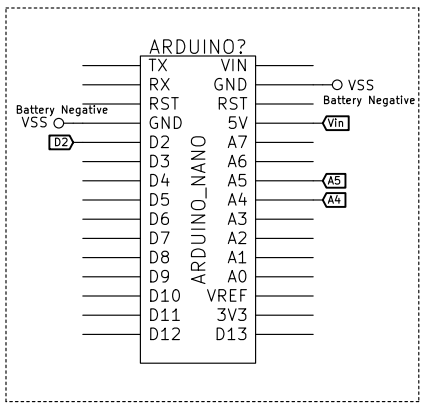

Arduino Nano Headers

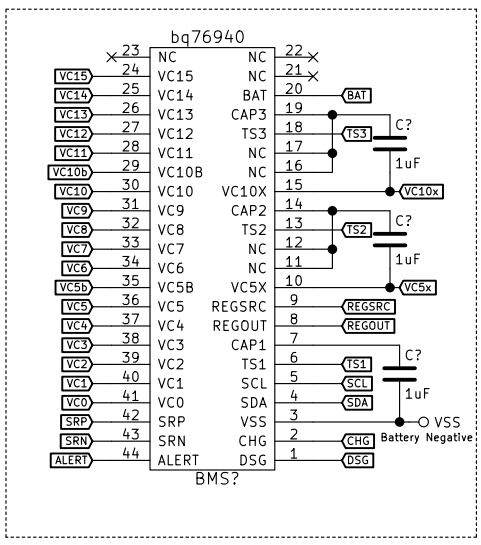

BQ76940 Circuit

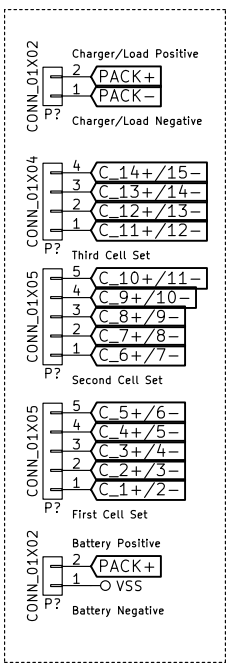

Battery Connectors

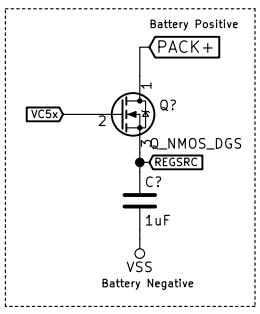

REGSRC Circuit

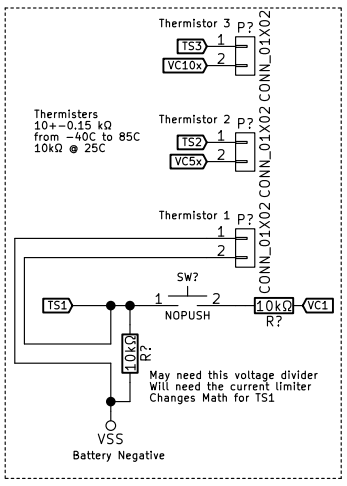

Thermister Circuit

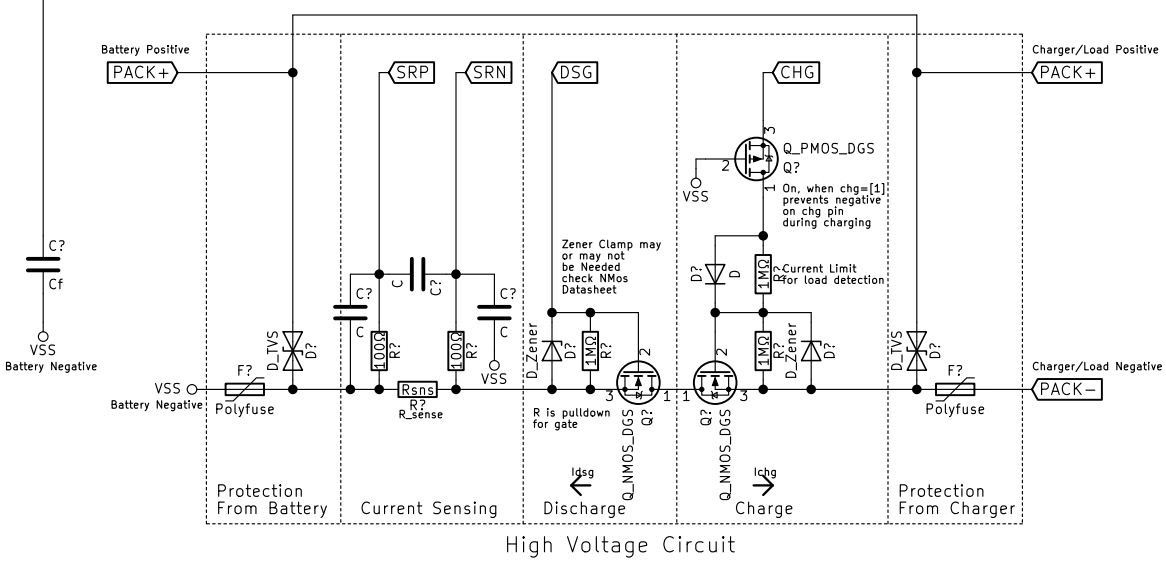

High Voltage Circuit

Sheet: /
File: BMS.sch

Title: BMarkley's BMS

Size: USLedger	Date: March 09 2017	Rev: 1
KiCad E.D.A. kicad 4.0.5		Id: 1/1