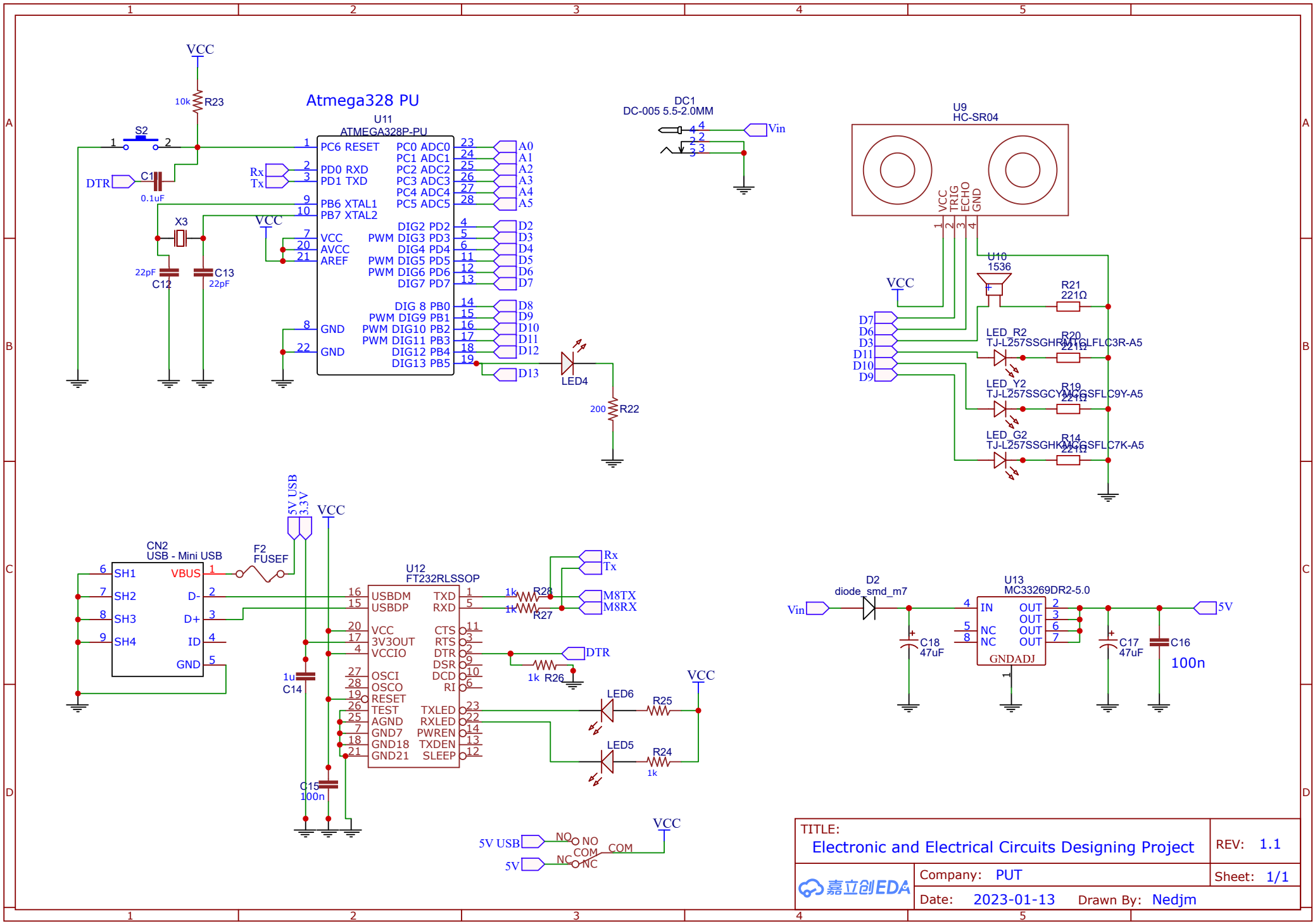

TITLE: Electronic and Electrical Circuits Designing Project		REV: 1.1
嘉立创EDA	Company: PUT	Sheet: 1/1
	Date: 2023-01-13 Drawn By: Nedjm	