Power_components

File: Power_components.kicad_sch

Power_Supplies

File: Power_Supplies.kicad_sch

GateDrivers

File: GateDrivers.kicad_sch

Sensors

File: Sensors.kicad_sch

MUC_AND_OTHERS

File: MUC_AND_OTHERS.kicad_sch

EMI_Filters

File: EMI_Filters.kicad_sch

Abdelaziz BOUZIANI

Sheet: /
File: LLC_DCDC_V5_Modifications.kicad_sch

Title: LLC 400V/48V 1200W 100kHz

Size: A4	Date: 2026-02-01	**Rev: 6**
KiCad E.D.A. 9.0.3		Id: 1/7

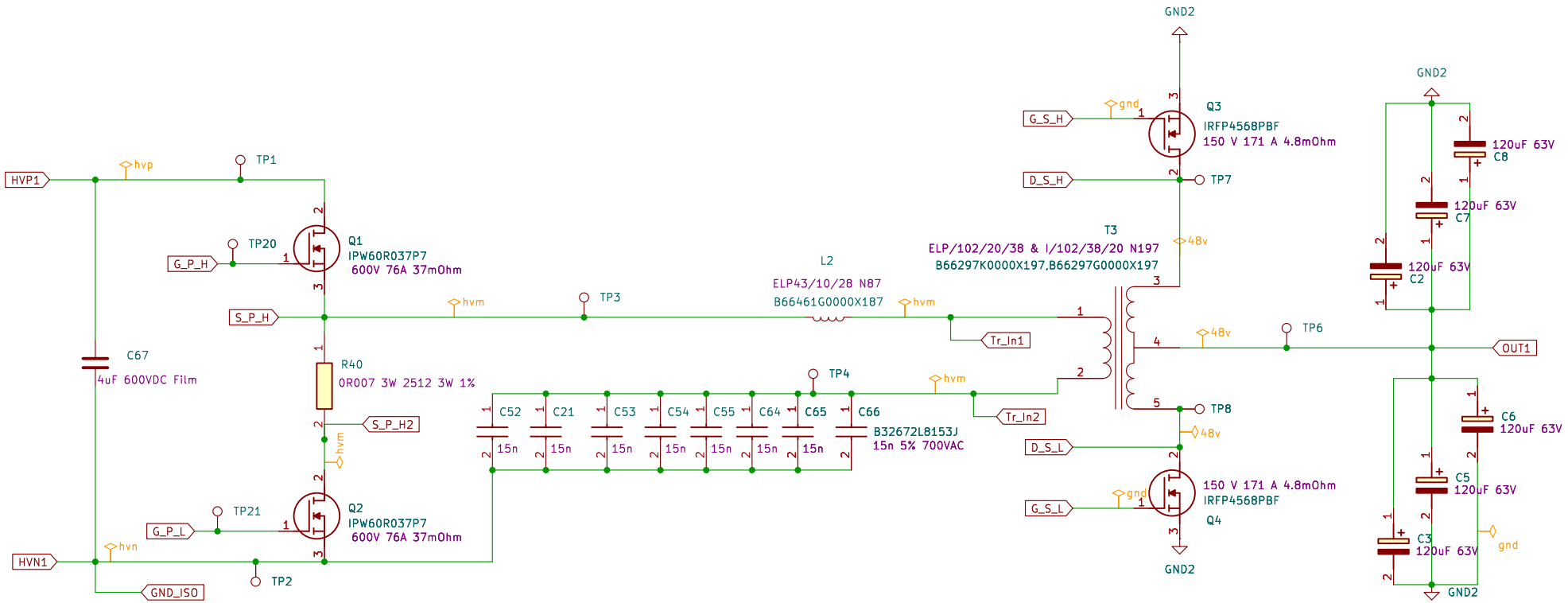

Abdelaziz BOUZIANI

Sheet: /Power_components/

File: Power_components.kicad_sch

Title: LLC 400V/48V 1200W 100kHz

Size: A4	Date: 2026-02-01	**Rev: 6**
KiCad E.D.A. 9.0.3		Id: 1/7

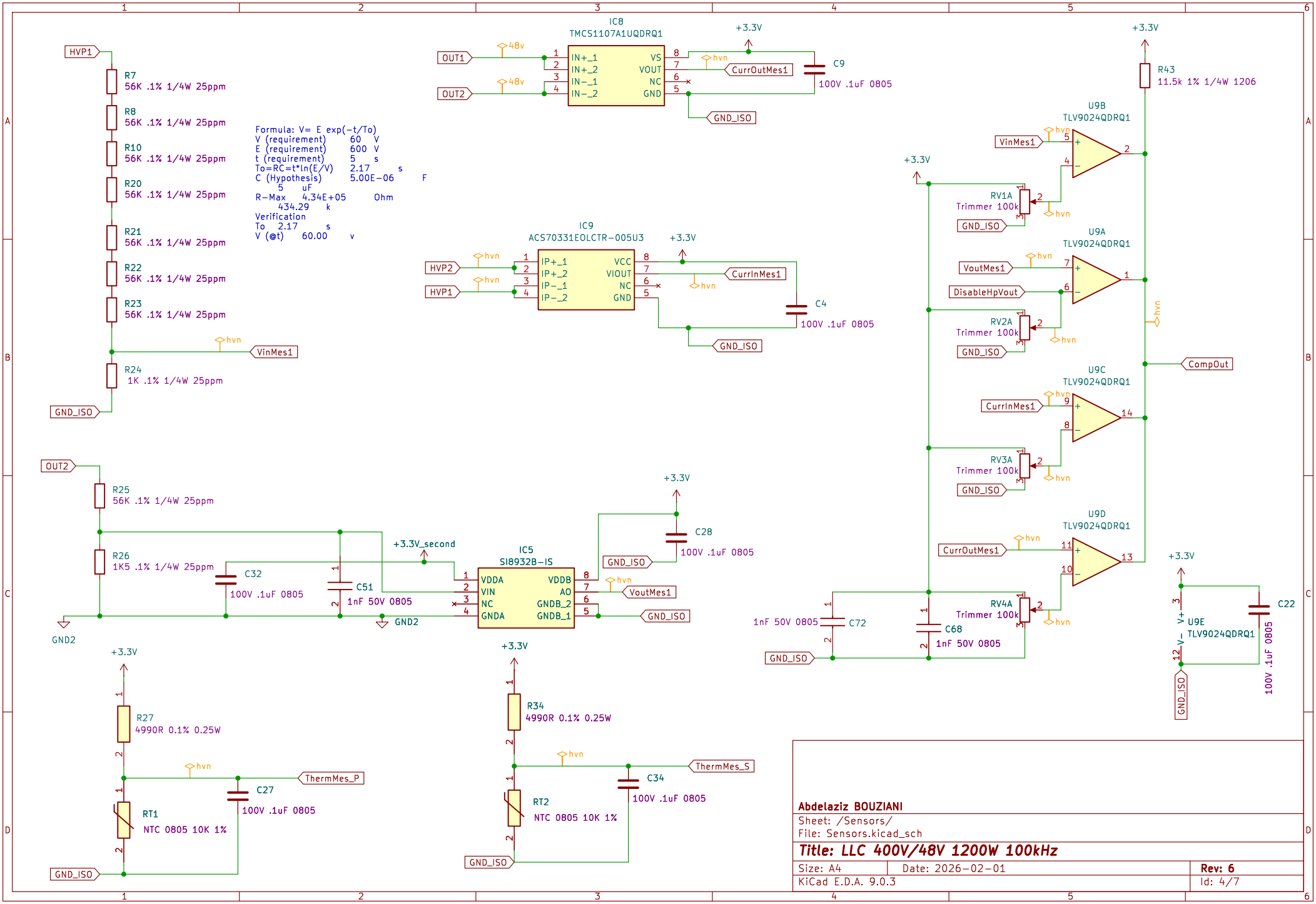
IC8
TMCS1107A1UQDRQ1
OUT1
OUT2
48v
IN+_1
IN+_2
IN−_1
IN−_2
VS
VOUT
NC
GND
+3.3V
hvn
CurrOutMes1
C9
100V .1uF 0805
GND_ISO
HVP1
R7
56K .1% 1/4W 25ppm
R8
56K .1% 1/4W 25ppm
R10
56K .1% 1/4W 25ppm
R20
56K .1% 1/4W 25ppm
R21
56K .1% 1/4W 25ppm
R22
56K .1% 1/4W 25ppm
R23
56K .1% 1/4W 25ppm
R24
1K .1% 1/4W 25ppm
VinMes1
Formula: V= E exp(−t/To)
V (requirement) 60 V
E (requirement) 600 V
t (requirement) 5 s
To=RC=t*ln(E/V) 2.17 s
C (Hypothesis) 5.00E−06 F
5 uF
R−Max 4.34E+05 Ohm
434.29 k
Verification
To 2.17 s
V (@t) 60.00 v
IC9
ACS70331EOLCTR−005U3
HVP2
IP+_1
IP+_2
IP−_1
IP−_2
VCC
VIOUT
NC
GND
CurrInMes1
C4
100V .1uF 0805
R43
11.5k 1% 1/4W 1206
U9B
TLV9024QDRQ1
RV1A
Trimmer 100k
U9A
TLV9024QDRQ1
VoutMes1
DisableHpVout
RV2A
Trimmer 100k
CompOut
U9C
TLV9024QDRQ1
RV3A
Trimmer 100k
U9D
TLV9024QDRQ1
RV4A
Trimmer 100k
C68
1nF 50V 0805
C72
1nF 50V 0805
U9E
TLV9024QDRQ1
C22
100V .1uF 0805
OUT2
R25
56K .1% 1/4W 25ppm
R26
1K5 .1% 1/4W 25ppm
C32
100V .1uF 0805
C51
1nF 50V 0805
GND2
+3.3V_second
IC5
SI8932B−IS
VDDA
VIN
NC
GNDA
VDDB
AO
GNDB_2
GNDB_1
C28
100V .1uF 0805
R27
4990R 0.1% 0.25W
RT1
NTC 0805 10K 1%
ThermMes_P
C27
100V .1uF 0805
R34
4990R 0.1% 0.25W
RT2
NTC 0805 10K 1%
ThermMes_S
C34
100V .1uF 0805
Abdelaziz BOUZIANI
Sheet: /Sensors/
File: Sensors.kicad_sch
Title: LLC 400V/48V 1200W 100kHz
Size: A4
Date: 2026−02−01
Rev: 6
KiCad E.D.A. 9.0.3
Id: 4/7

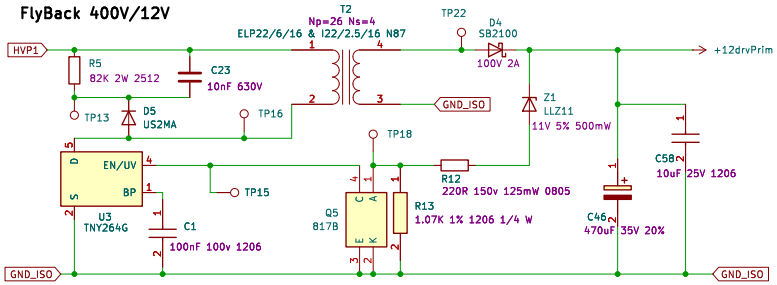

https://www.power.com/sites/default/files/documents/di176.pdf?language=en

https://www.power.com/products/tinyswitch/tinyswitch-iii/tny280p

100nF (of flyback charger, i measure it, 5.877v measurement)

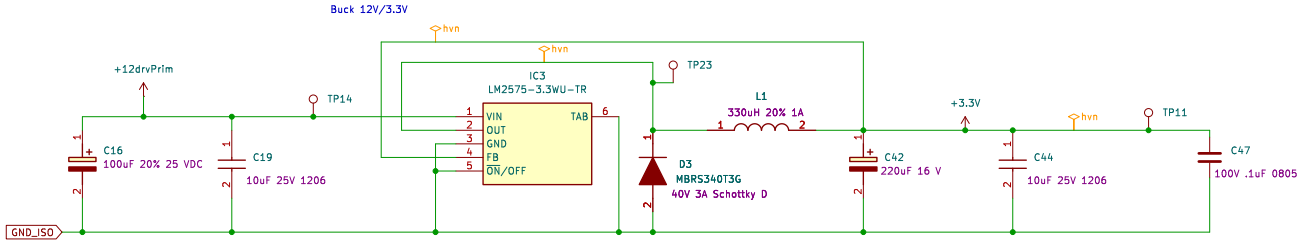

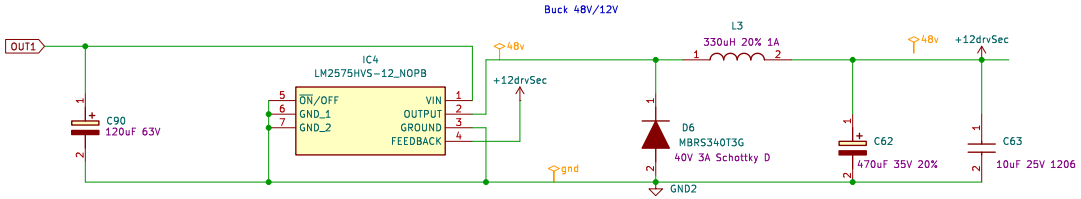

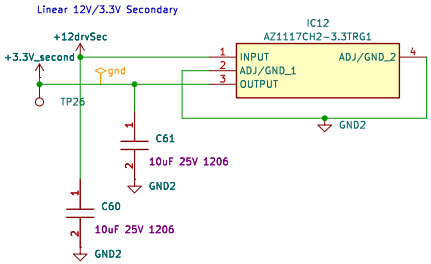

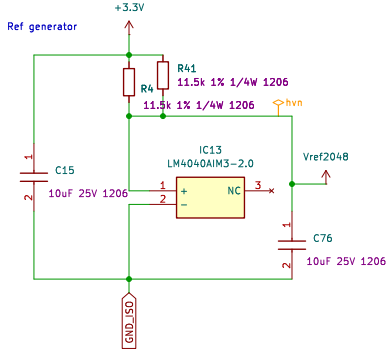

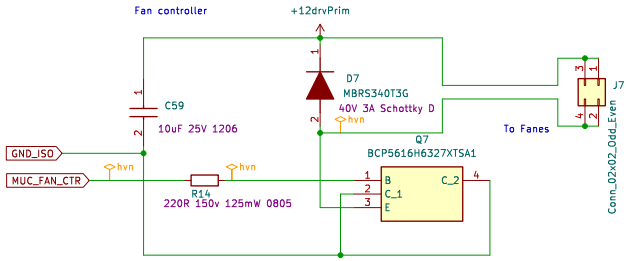

Abdelaziz BOUZIANI	
Sheet: /Power_Supplies/	
File: Power_Supplies.kicad_sch	
Title: LLC 400V/48V 1200W 100kHz	
Size: A3 Date: 2026-02-01	Rev: 6
KiCad E.D.A. 9.0.3	Id: 2/7

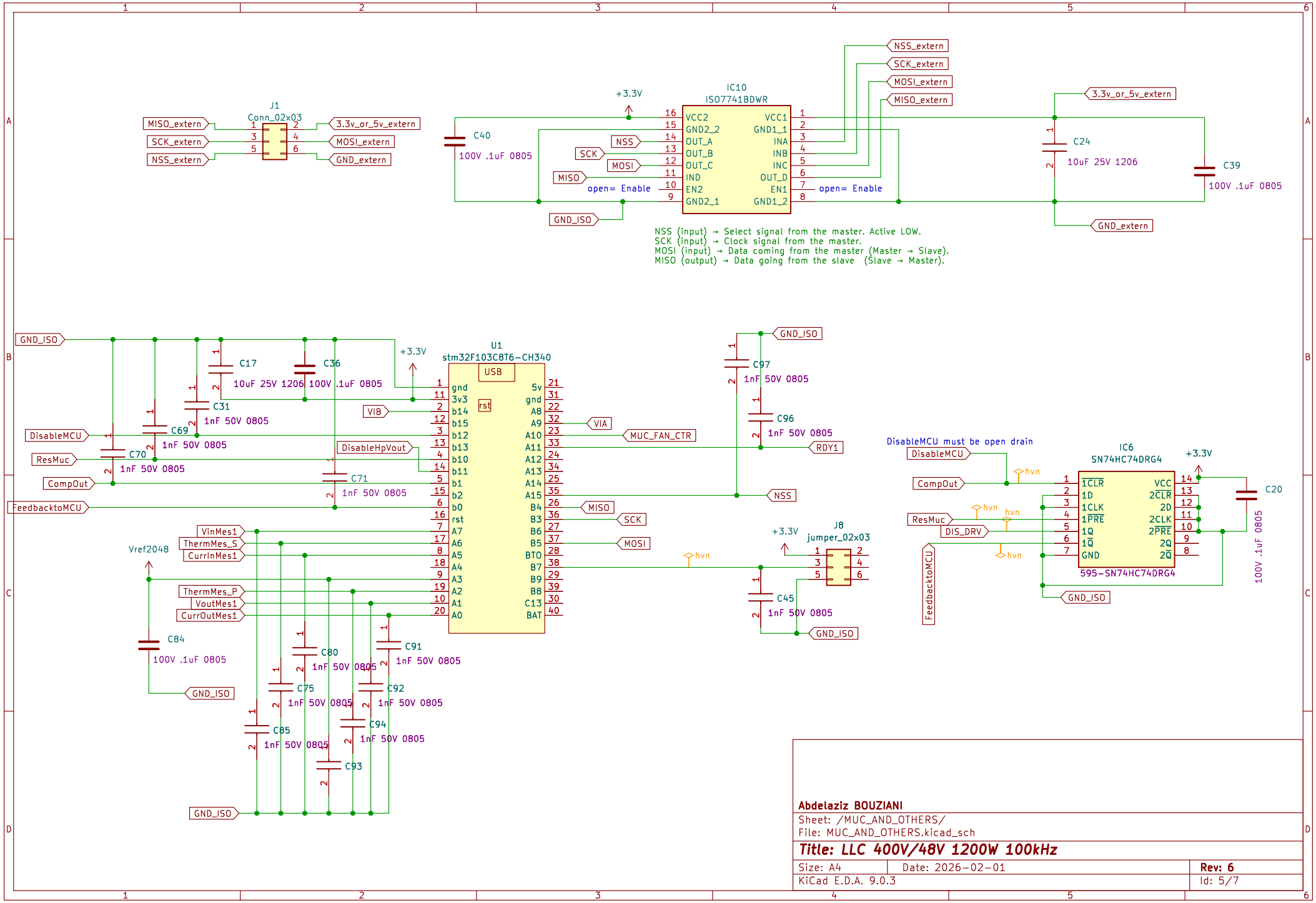

Abdelaziz BOUZIANI

Sheet: /MUC_AND_OTHERS/

File: MUC_AND_OTHERS.kicad_sch

Title: LLC 400V/48V 1200W 100kHz

Size: A4	Date: 2026-02-01	**Rev: 6**
KiCad E.D.A. 9.0.3		Id: 5/7

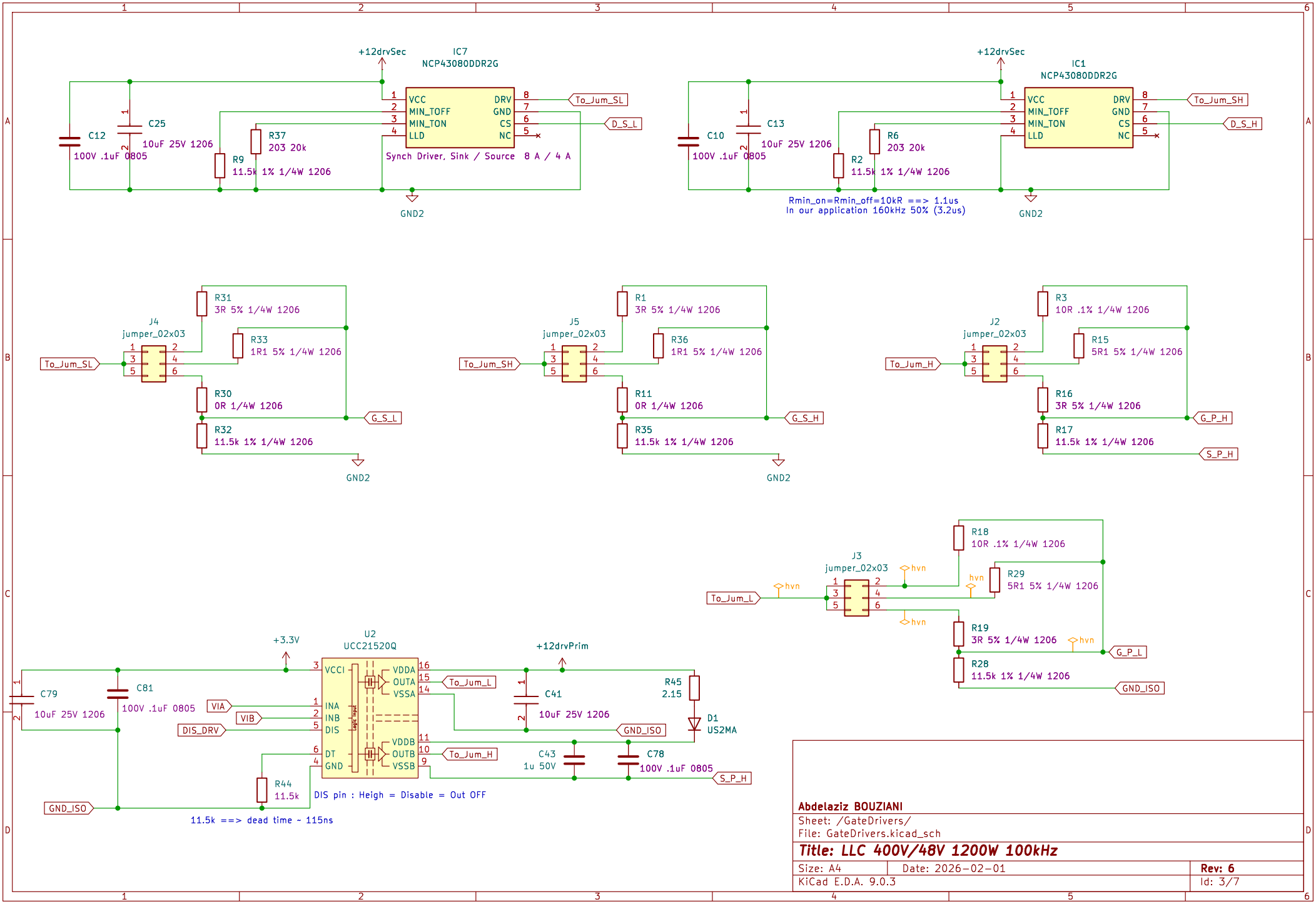

Abdelaziz BOUZIANI

Sheet: /GateDrivers/

File: GateDrivers.kicad_sch

Title: LLC 400V/48V 1200W 100kHz

Size: A4	Date: 2026-02-01	**Rev: 6**
KiCad E.D.A. 9.0.3		Id: 3/7

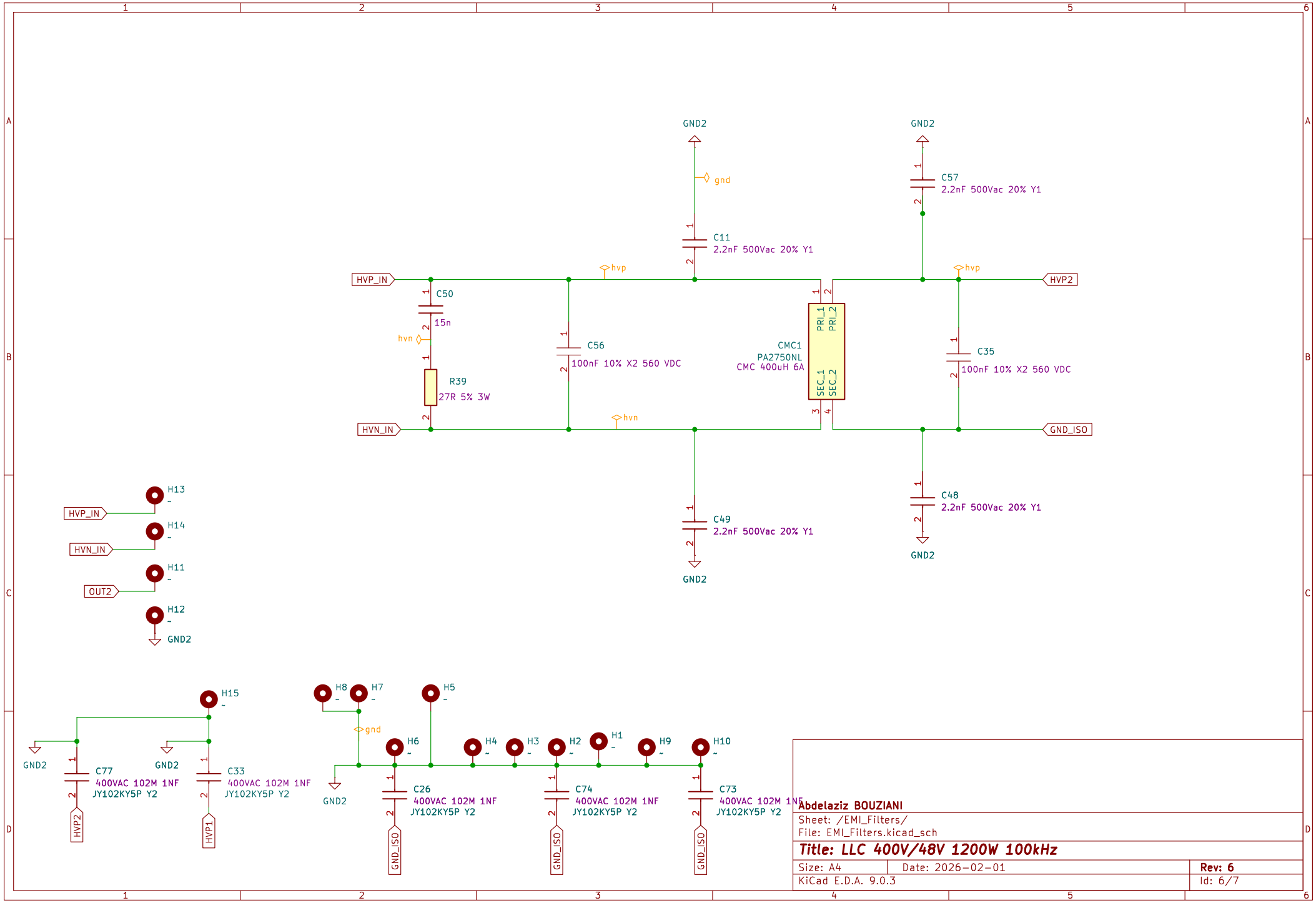

Abdelaziz BOUZIANI

Sheet: /EMI_Filters/

File: EMI_Filters.kicad_sch

Title: LLC 400V/48V 1200W 100kHz

Size: A4	Date: 2026-02-01	Rev: 6
KiCad E.D.A. 9.0.3		Id: 6/7