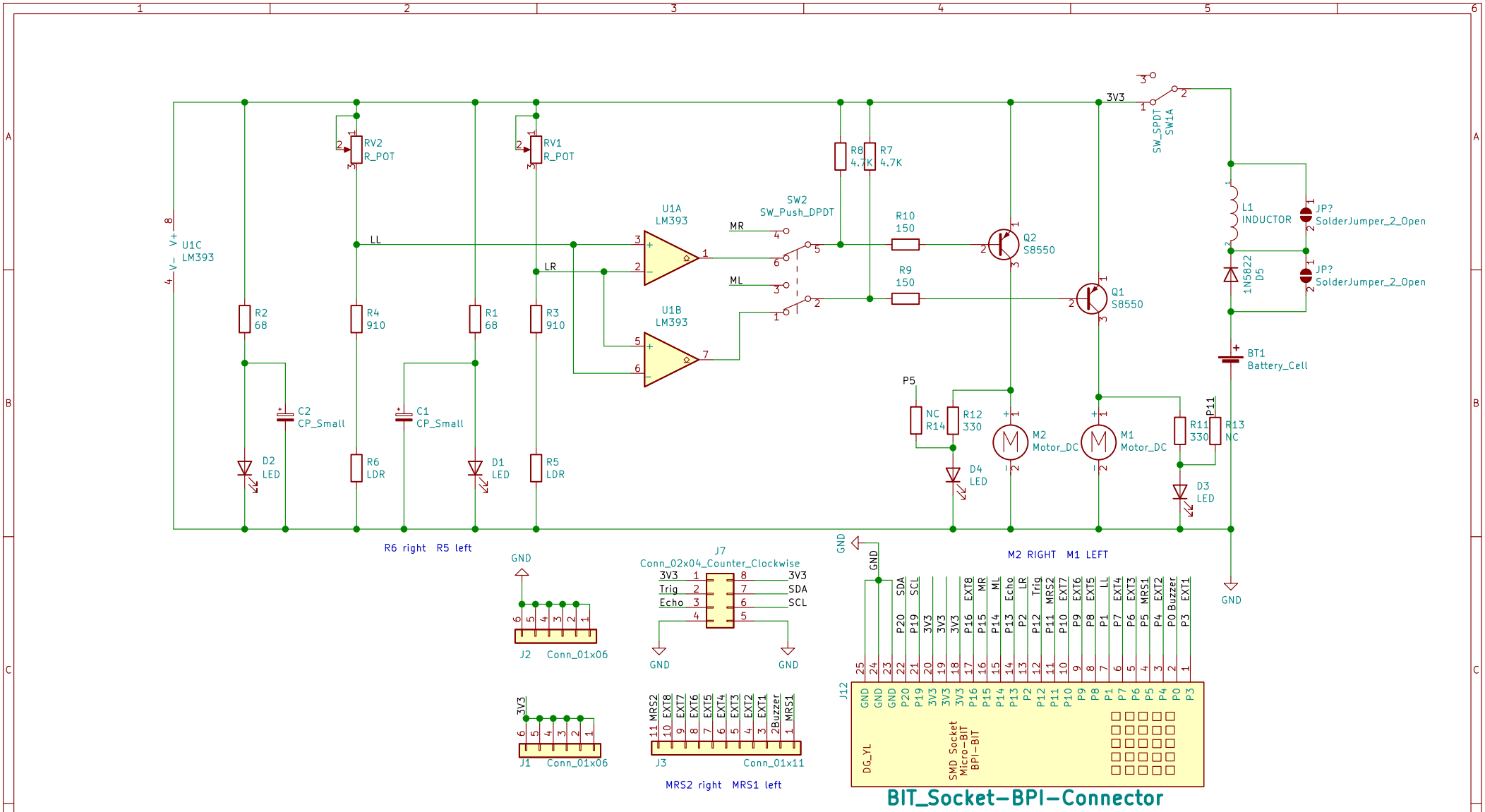

KiCad E.D.A. kicad (5.1.8)-1

Design Name

Size: A4

File: BPi-BIT-Triode-Car.sch

Rev:

Date:

Sheet: 1/1