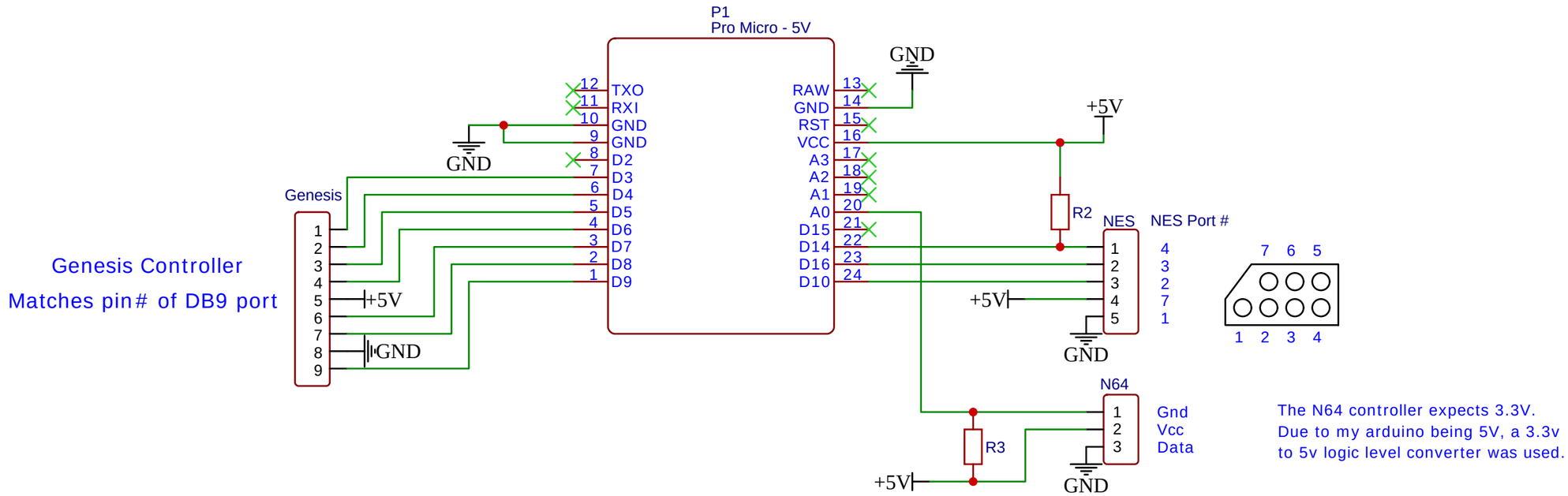

The N64 controller expects 3.3V.
Due to my arduino being 5V, a 3.3v
to 5v logic level converter was used.

TITLE: Sheet_1		REV: 1.0
嘉立创EDA	Company: Your Company	Sheet: 1/1
	Date: 2023-01-11 Drawn By: Bill S	