UPDATED ROLLER 35 mm

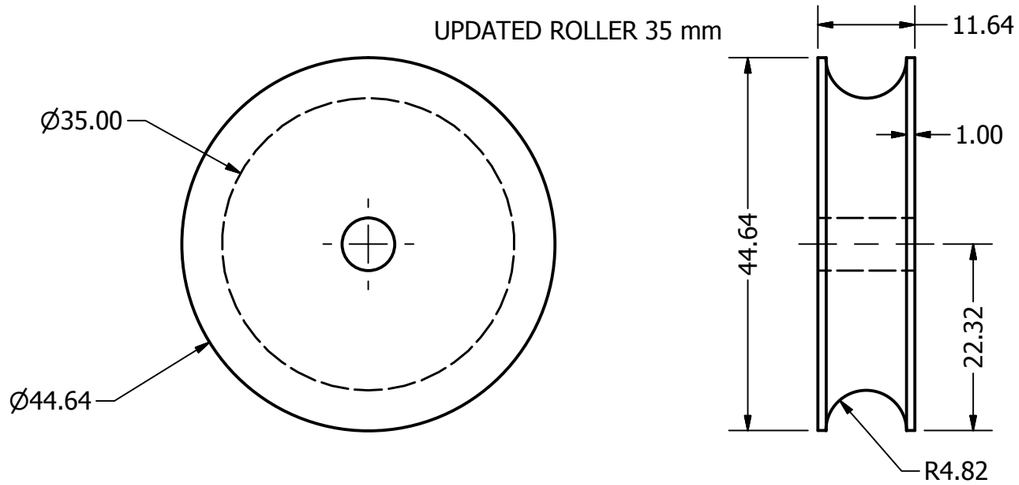

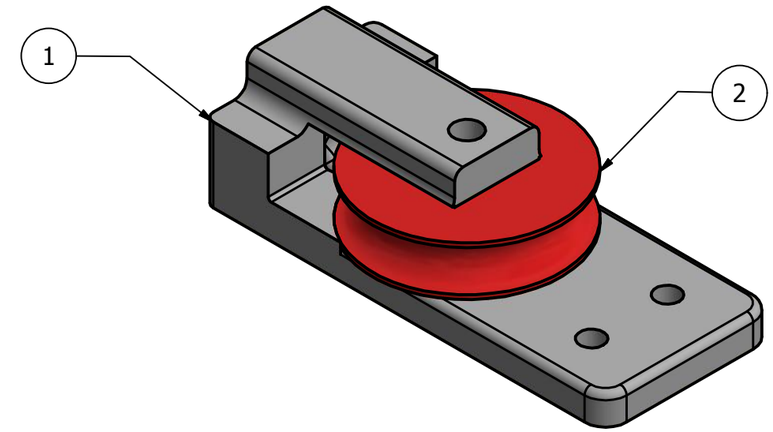

UPDATED 3D PRINTED BASE

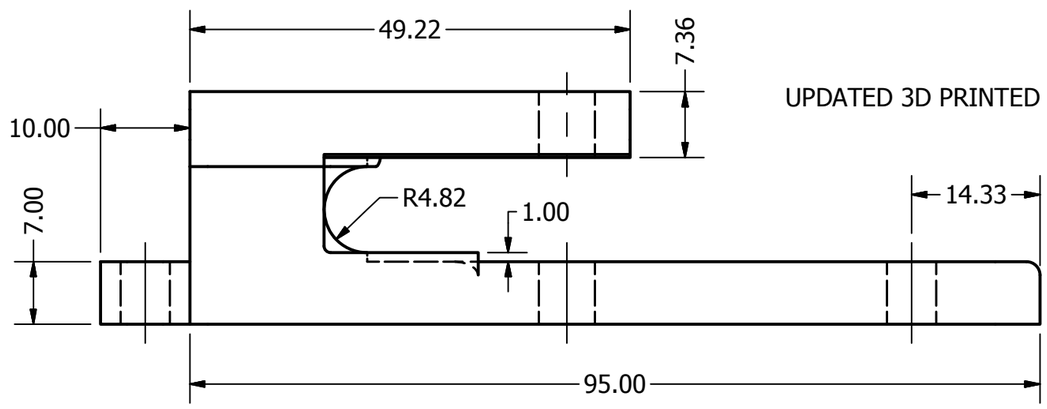

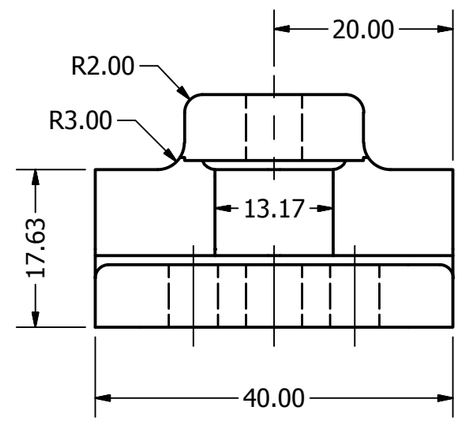

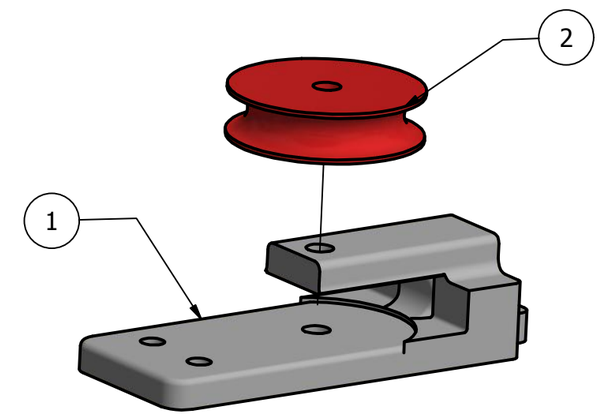

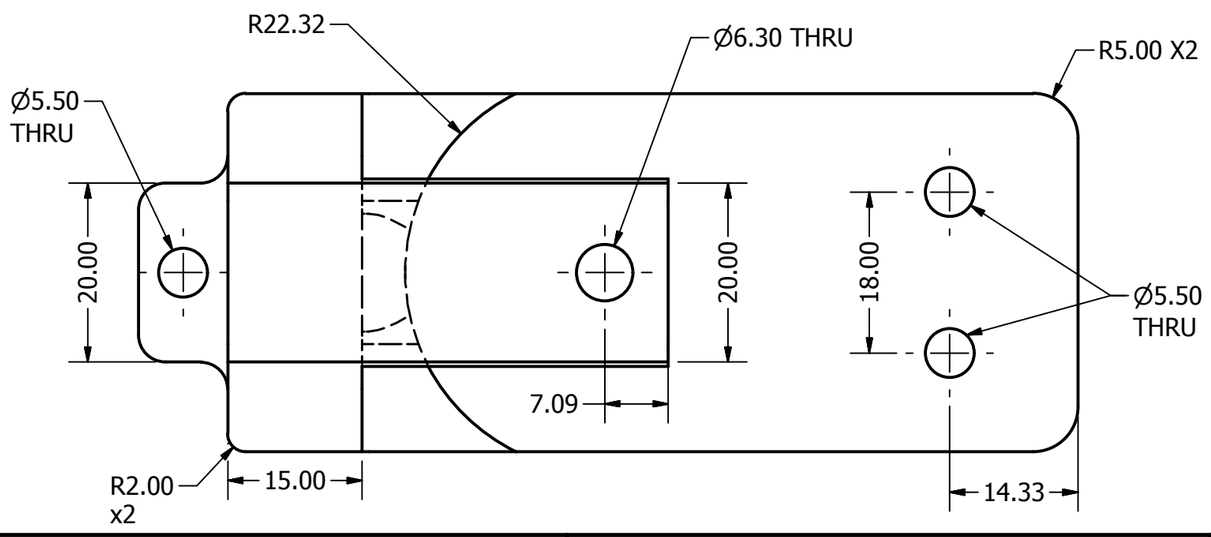

PARTS LIST

ITEM	QTY	PART NUMBER	DESCRIPTION
1	1	BenderBaseUpdated	3D PRINT 75% ABS
2	1	BenderUpdatedRoller	3D PRINT 50% ABS

DRAWN ARMANDO FEUCHTER	1/29/2016	TAMU SRT-3
CHECKED		TITLE
QA		UPDATED 3D PRINTED JIG
MFG		
APPROVED		SIZE B / DWG NO DIMENSIONS IN mm / REV
		SCALE 1.5 / SHEET 1 OF 1