Lab #1
Qubit State Tomography

Brent Artuch

October 26, 2025

In qubit state tomography, we prepare a qubit in a particular quantum state and then measure it in 3 different bases (X, Y, and Z) and restore the initial state from statistical probabilities of different outcomes.

The state that will be studied is

$$|\psi\rangle = (HT)^2 HSH|0\rangle,$$

Using Quirk to emulate this transformation, the resulting probabilities for $|-\rangle$, $|-i\rangle$, and $|1\rangle$ (ON measurements) respectively should result approximately as displayed in the figure below:

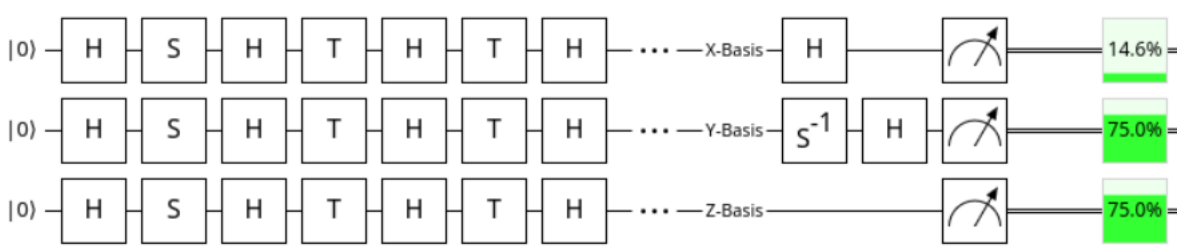

Moving over to Qiskit, implementing the required programming logic gives us the following circuit where q_x, q_y, and q_z represent the quantum registers and a, b, and c represent the classical registers where the measurement results will be stored:

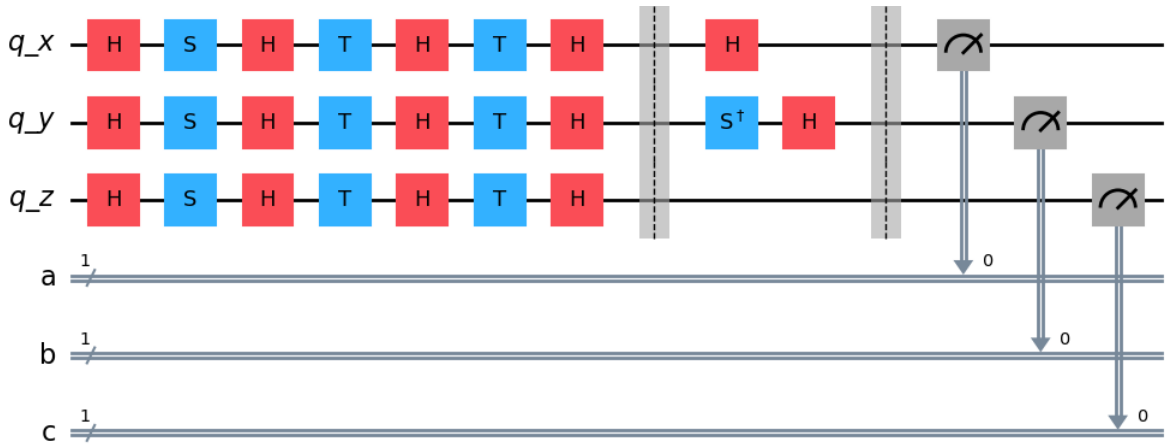

And using the AER simulator in Qiskit, we get this distribution over 3000 samples which represents the resulting state $|q_z^{'}q_y^{'}q_x^{'}\rangle = |\psi\rangle$:

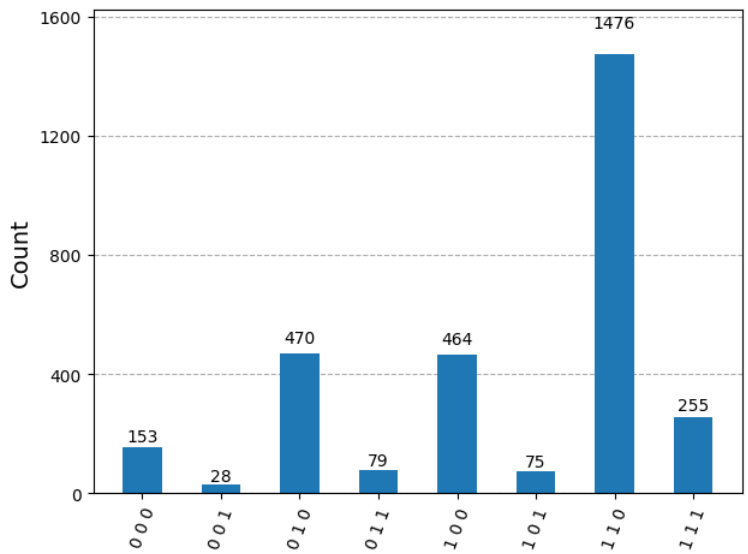

Where the probabilities are:

$$P_X(|-\rangle) = \frac{\langle 1_0|\psi\rangle}{3000} = \frac{28+79+75+255}{3000} = 14.6\%$$
$$P_Y(|-i\rangle) = \frac{\langle 1_1|\psi\rangle}{3000} = \frac{470+79+1476+255}{3000} = 76.0\%$$
$$P_Z(|1\rangle) = \frac{\langle 1_2|\psi\rangle}{3000} = \frac{464+75+1476+255}{3000} = 75.7\%$$

which is the result we achieved using Quirk within a 1.3% difference.

Quantum State Tomography (QST) of Unentangled Qubit

1a. Build a quantum circuit realizing the described here QST scheme, run it on a quantum processor (at least 1000 times each measurement to get enough statistics) and record the probabilities of different outcomes.

The resulting counts for 3000 measurements were (measured independently because of how the Sampler function executes):

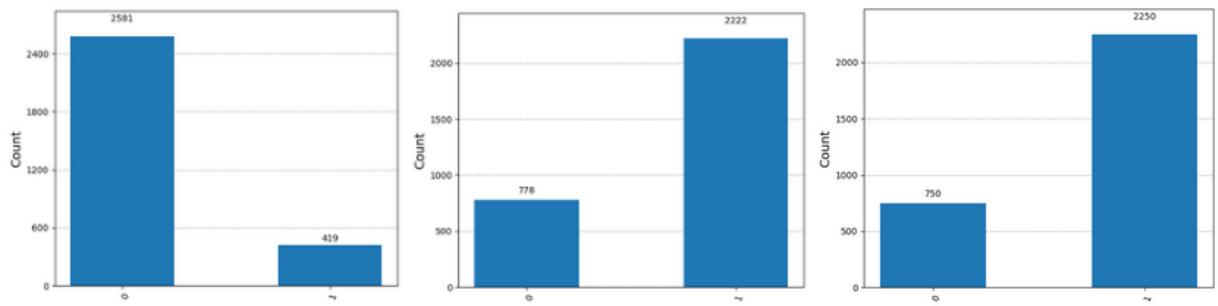

X-Basis Results Y-Basis Results Z-Basis Results

Where the probabilities are:

$$P_X(|-\rangle) = \frac{\langle 1_0|\psi\rangle}{3000} = \frac{419}{3000} = 14.0\%$$
$$P_Y(|-i\rangle) = \frac{\langle 1_1|\psi\rangle}{3000} = \frac{2222}{3000} = 74.0\%$$
$$P_Z(|1\rangle) = \frac{\langle 1_2|\psi\rangle}{3000} = \frac{2250}{3000} = 75.0\%$$

1b. Find the components $\{n_x, n_y, n_z\}$ of the Bloch vector corresponding to the state $|\psi\rangle$. Find the length $n = |\boldsymbol{n}|$ of the Bloch vector. Theoretically, the length of the Bloch vector should be 1. How close is your value to the theoretically predicted one?

The n components are:

$$n_x = P_X(|+\rangle) - P_X(|-\rangle) = (86.0 - 14.0)\% = 72.0\% = 0.72$$
$$n_y = P_Y(|i\rangle) - P_Y(|-i\rangle) = (26.0 - 74.0)\% = -48.0\% = -0.48$$
$$n_z = P_Z(|0\rangle) - P_Z(|1\rangle) = (25.0 - 75.0)\% = -50.0\% = -0.5$$

And the length of n is:

$$|n| = \sqrt{0.72^2 + 0.48^2 + 0.5^2} = 0.999$$

which differs from the expected value of $|n| = 1$ by 0.1%.

1c. Restore the qubit state $|\psi\rangle$ using experimental results for the Bloch vector $\boldsymbol{n}$. Compare with theoretical predictions (you may use analytical calculations or Quirk or this). Make a conclusion about accuracy of QST for unentangled qubits at the current state of development of quantum technologies.

In the Z-basis:

$$|\psi\rangle = c_0 |0\rangle + c_1 |1\rangle$$

where c_0 is:

$$c_0 = \sqrt{\frac{-0.5 + 1}{2(1)}} = 0.5$$

and c_1 is:

$$c_1 = \frac{0.72 - i(0.48)}{\sqrt{2(1)(-0.5 + 1)}} = 0.72 - 0.48i$$

Now if we have restored the state fully as a pure state:

$$|c_0|^2 + |c_1|^2 = 1$$

so

$$|0.5|^2 + |0.72 - 0.48i|^2 = 0.25 + 0.75 = 1$$

Thus, we have succesfully restored the qubit state $|\psi\rangle$ via experimental results that align with our theoretical predictions presented in the introduction. The greatest observed difference bewtween experimental vs theoretical measured probabilities was 1.3% which allows us to reasonably conclude that Quantum State Tomography for unentangled qubits can be quite accurate with current quantum technologies as long as there are is a large enough sample size of measurements.

QST of Entangled Qubit

We will now run the same circuit but this time we will introduce entanglement by applying $CNOT$ gates to ancilla qubits as shown:

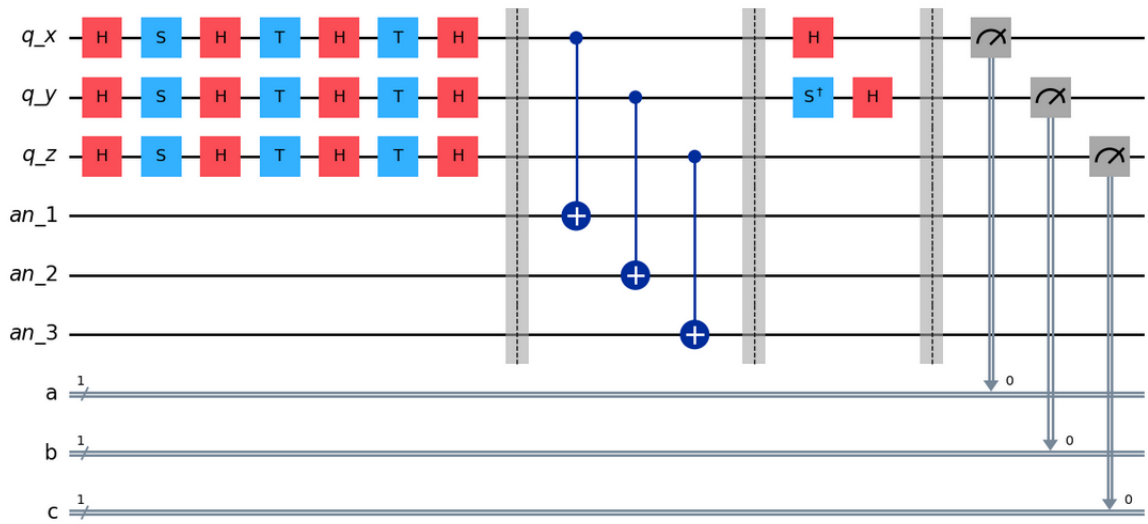

And our AER distribution representing the final state $|\psi\rangle$ is:

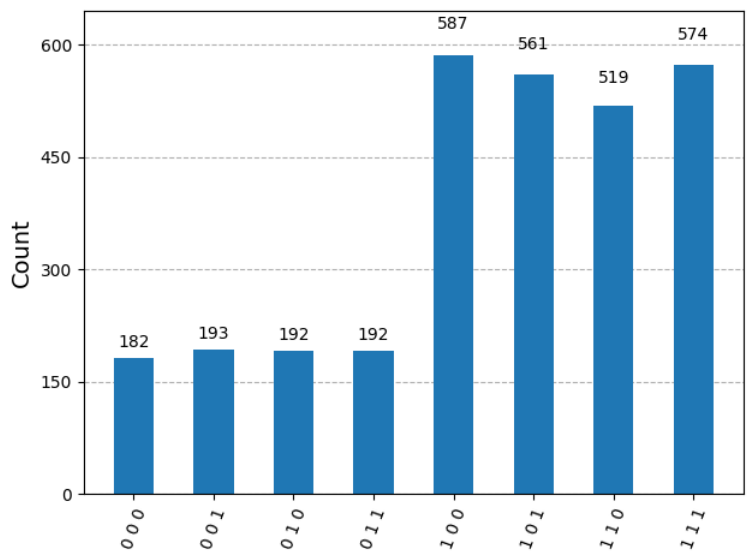

Where the probabilities are:

$$P_X(|-\rangle) = \frac{\langle 1_0|\psi\rangle}{3000} = \frac{193+192+561+574}{3000} = 50.6\%$$
$$P_Y(|-i\rangle) = \frac{\langle 1_1|\psi\rangle}{3000} = \frac{192+192+519+574}{3000} = 49.2\%$$
$$P_Z(|1\rangle) = \frac{\langle 1_2|\psi\rangle}{3000} = \frac{587+561+519+574}{3000} = 74.7\%$$

2a. Build the quantum circuit, run on a quantum processor, record probabilities of the measurement outcomes.

The resulting counts for 1000 measurements were:

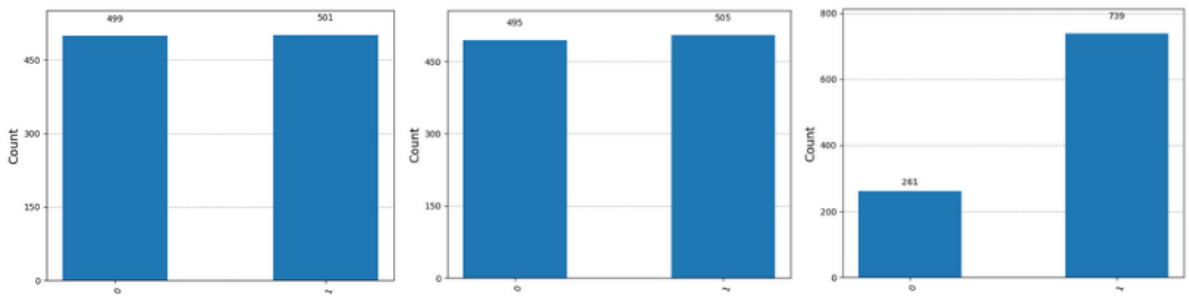

X-Basis Results Y-Basis Results Z-Basis Results

Where the probabilities are:

$$P_X(|-\rangle) = \frac{\langle 1_0|\psi\rangle}{1000} = \frac{501}{1000} = 50.1\%$$
$$P_Y(|-i\rangle) = \frac{\langle 1_1|\psi\rangle}{1000} = \frac{505}{1000} = 50.5\%$$
$$P_Z(|1\rangle) = \frac{\langle 1_2|\psi\rangle}{1000} = \frac{739}{1000} = 73.9\%$$

2b. Calculate the components of the Bloch vector $\boldsymbol{n}$ and its length $n = |\boldsymbol{n}|$. Compare the results to the results obtained in part **1b**. What happens to the length of the Bloch vector if the qubit is entangled?

The n components are:

$$n_x = P_X(|+\rangle) - P_X(|-\rangle) = (49.9 - 50.1)\% = -0.2\% = -0.002$$
$$n_y = P_Y(|i\rangle) - P_Y(|-i\rangle) = (49.5 - 50.5)\% = -1.0\% = -0.010$$
$$n_z = P_Z(|0\rangle) - P_Z(|1\rangle) = (26.1 - 73.9)\% = -47.8\% = -0.478$$

And the length of n is:

$$|n| = \sqrt{0.002^2 + 0.010^2 + 0.478^2} = 0.478$$

which is not equal to 1 as in part 1. So we have observed through experimental data that an entangled qubit will have a Bloch vector length less than 1.

2c. The CNOT gate uses control condition in Z basis, i.e., it acts on the target qubit only when the control qubit is in $|1\rangle$ state. Thus, Z axis is different from X and Y axes when we apply CNOT. Analyze your results for n_z component and for $\{n_x, n_y\}$ components separately. What happens to the "control" component n_z of entangled qubit? What happens to the to the n_x and n_y components of the Bloch vector? Is there any difference?

We observe from comparison of the n components in the unentangled versus the entangled results that the n_z "control" component is unchanged by entanglement if $CNOT$ activates on $|1\rangle$. In contrast, the n_x and n_y components are affected and change to a 0 result since the probabilities $P_X(|-\rangle) = P_Y(|-i\rangle) = 50\%$ after $CNOT$ is applied. Further experimentation with alterations of the gate sequence in Quirk supports this conclusion:

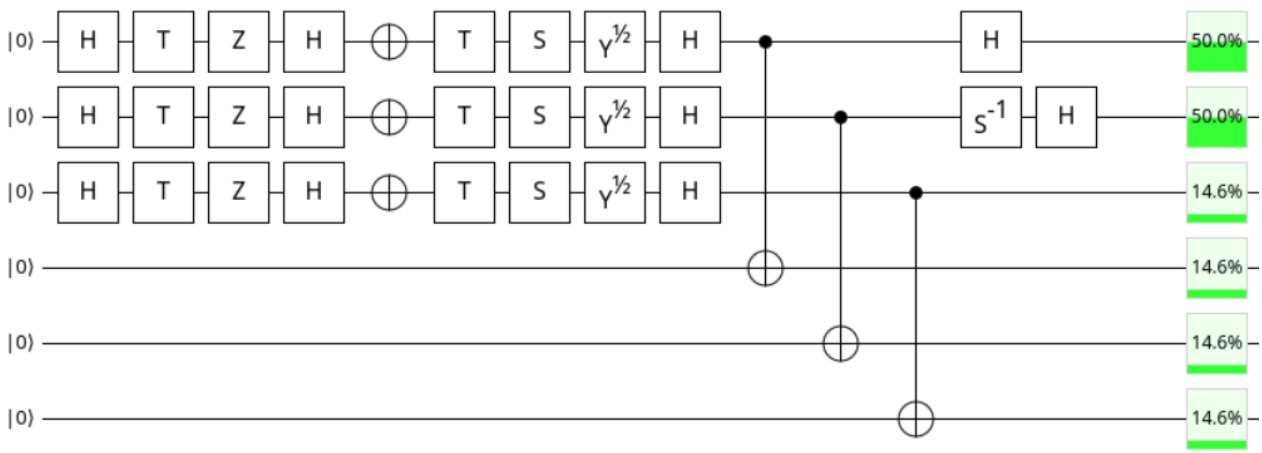

2d. Based on the above analysis, try to predict results of QST measurements when a different entangling scheme is used:

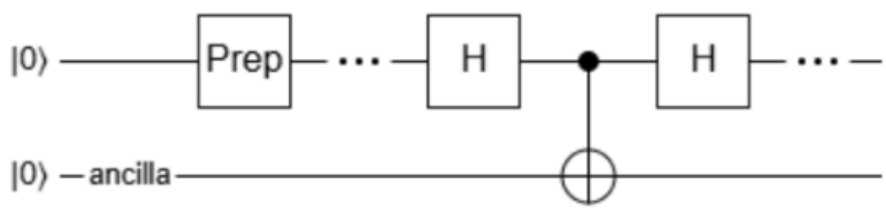

Based on our conclusion above, $CNOT$ will now activate on $|-\rangle$. Therefore the unchanged component will be n_x while the n_y and n_z components will become 0 because now the probabilities $P_Z(|1\rangle) = P_Y(|-i\rangle) = 50\%$ after $CNOT$ is applied. We confirm this hypothesis with Quirk:

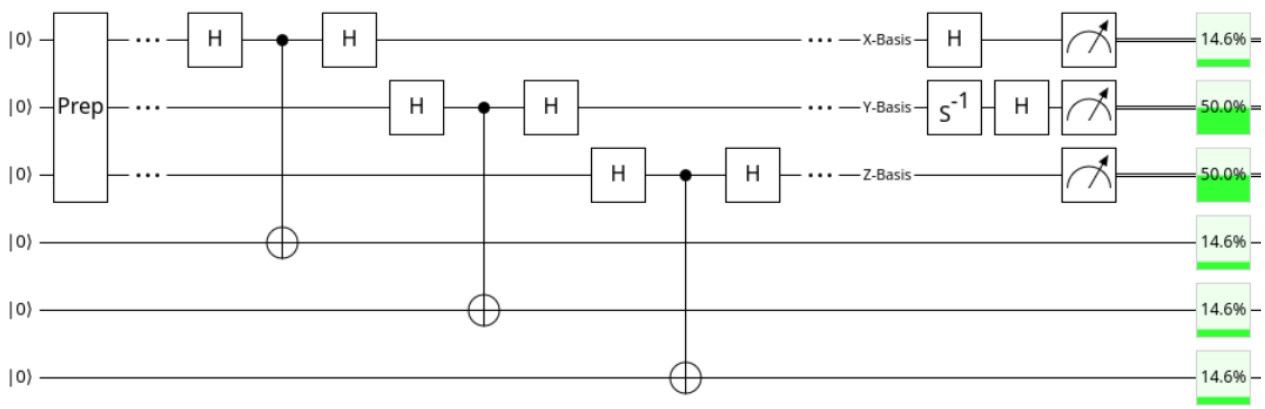

Observe in the diagram above that the probability of measureing $|-\rangle$, $P(|-\rangle) = 14.6\%$, matches the corresponding probability in the original unentangled scheme while $P_Z(|1\rangle)$ and $P_Y(|-i\rangle)$ changed to 50% as predicted.

2e. Restore the qubit state $|\psi\rangle$ using experimental results for the Bloch vector $\boldsymbol{n}$. Make a conclusion about possibility and accuracy of QST for entangled qubits.

In the Z-basis, the state of the control qubit is:

$$|\psi\rangle = c_0 |0\rangle + c_1 |1\rangle$$

where c_0 is:

$$c_0 = \sqrt{\frac{-0.478 + 1}{2(1)}} = 0.51$$

and c_1 is:

$$c_1 = \frac{-0.002 - i(0.010)}{\sqrt{2(1)(-0.478 + 1)}} \approx 0$$

Now if we have restored the state fully as a pure state:

$$|c_0|^2 + |c_1|^2 = 1$$

so

$$|0.51|^2 + |0|^2 = 0.26 < 1$$

This only describes the $|\psi\rangle$ portion of the overall entangled system since the sum of the squared amplitudes is less than 1. The other 74% is accounted for in the target ancilla bit. So, to get the overall entangled state via QST, we would need to include measurement of the ancilla bit as well as shown below:

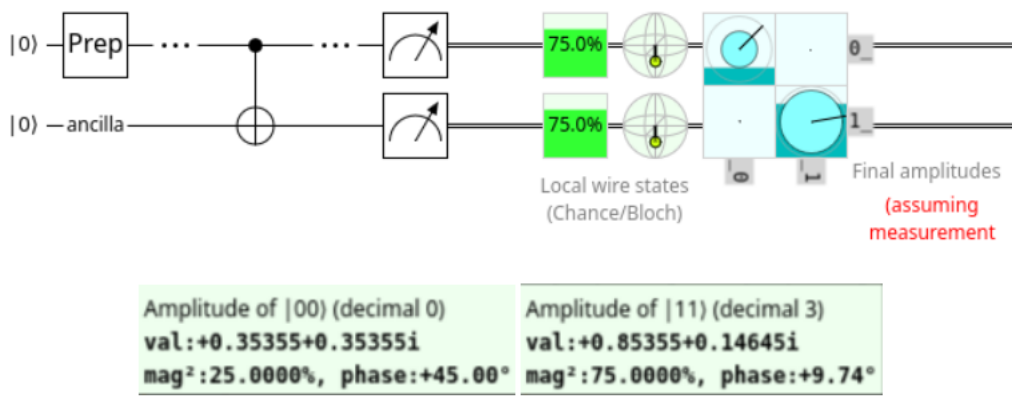

Where the final state $|\psi_{twoQubit}\rangle$ of the 2-qubit entangled system is described by the state equation:

$$|\psi_{twoQubit}\rangle = \frac{1}{2}|00\rangle + \frac{\sqrt{3}}{2}|11\rangle$$

In conclusion, for an entangled system of qubits, we need to take measurements of all of the qubits involved in order to create a full description of the final state of the system. Using the method from part one only allows us to observe a portion of this description. An ample number of measurements is still required to make an accurate reconstruction of the original state via QST.

QST of Weakly Entangled Qubit

Finally, we will run the same circuit but this time we will introduce weak entanglement by applying CCX gates to "control entangle" and ancilla qubits as shown:

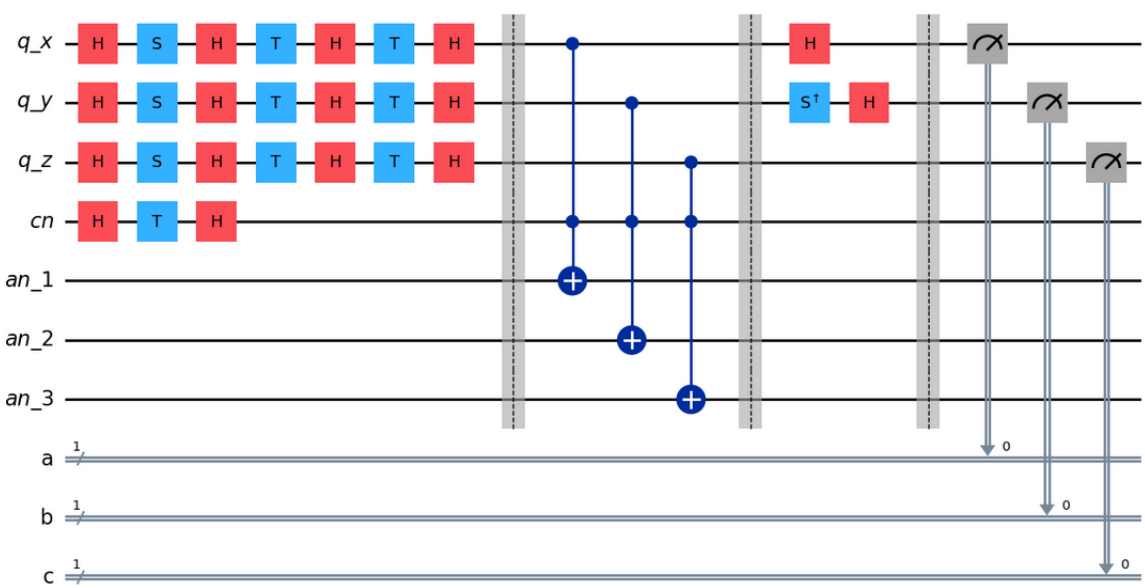

And our AER distribution representing the final state $|\psi\rangle$ is:

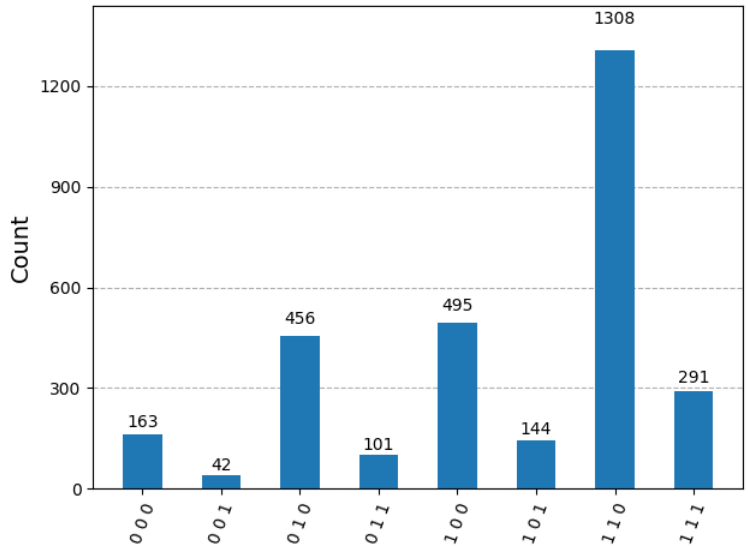

Where the probabilities are:

$$P_X(|-\rangle) = \frac{\langle 1_0|\psi\rangle}{3000} = \frac{42+101+144+291}{3000} = 19.2\%$$
$$P_Y(|-i\rangle) = \frac{\langle 1_1|\psi\rangle}{3000} = \frac{456+101+1308+291}{3000} = 71.9\%$$
$$P_Z(|1\rangle) = \frac{\langle 1_2|\psi\rangle}{3000} = \frac{495+144+1308+291}{3000} = 74.6\%$$

3a. Build and run the quantum circuit, record the measurement results.

The resulting counts for 1000 measurements were:

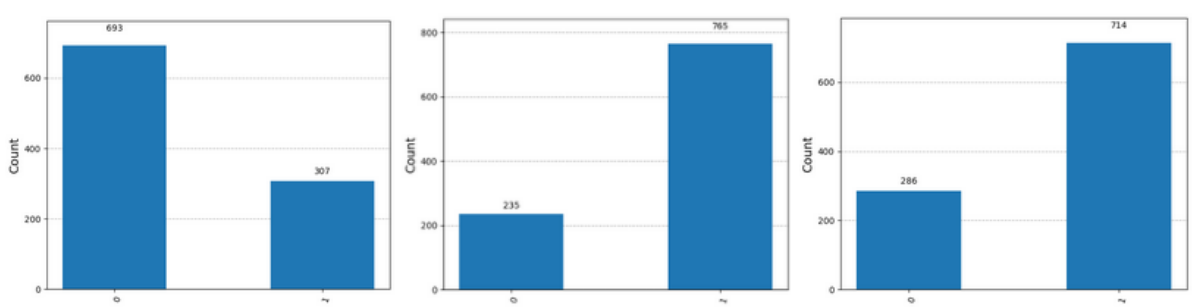

X-Basis Results Y-Basis Results Z-Basis Results

Where the probabilities are:

$$P_X(|-\rangle) = \frac{\langle 1_0|\psi\rangle}{1000} = \frac{307}{1000} = 30.7\%$$
$$P_Y(|-i\rangle) = \frac{\langle 1_1|\psi\rangle}{1000} = \frac{765}{1000} = 76.5\%$$
$$P_Z(|1\rangle) = \frac{\langle 1_2|\psi\rangle}{1000} = \frac{714}{1000} = 71.4\%$$

3b. Find the Bloch vector of the qubit. Analyze your findings: what happens to the length and each component of the Bloch vector (compared to parts **1** and **2**).

The n components are:

$$n_x = P_X(|+\rangle) - P_X(|-\rangle) = (69.3 - 30.7)\% = 35.6\% = 0.386$$
$$n_y = P_Y(|i\rangle) - P_Y(|-i\rangle) = (23.5 - 76.5)\% = -53.0\% = -0.530$$
$$n_z = P_Z(|0\rangle) - P_Z(|1\rangle) = (28.6 - 71.4)\% = -42.8\% = -0.428$$

And the length of n is:

$$|n| = \sqrt{0.386^2 + 0.530^2 + 0.428^2} = 0.783$$

We observe again that the magnitude of the Bloch vector is less than 1, which is what we expected given the conclusions we made in part 2 about entangled states requiring measurements of all qubits involved. This magnitude is higher than part 2, which suggests a weaker level of entanglement because, in general, a zero magnitude indicates maximal entanglement. In contrast, a Bloch vector magnitude of one (like in part 1) indicates a pure (non-entangled) state.

3c. Restore the qubit state $|\psi\rangle$. Make a conclusion about accuracy of QST for weakly entangled states.

In the Z-basis, the state of the control qubit is:

$$|\psi\rangle = c_0\,|0\rangle + c_1\,|1\rangle$$

where c_0 is:

$$c_0 = \sqrt{\frac{-0.428 + 1}{2(1)}} = 0.535$$

and c_1 is:

$$c_1 = \frac{0.386 - i(0.530)}{\sqrt{2(1)(-0.428 + 1)}} = 0.36 - 0.496i$$

Now if we have restored the state fully as a pure state:

$$|c_0|^2 + |c_1|^2 = 1$$

so

$$|0.535|^2 + |0.36 - 0.496i|^2 = 0.663 < 1$$

Based on these results and the Quirk diagram below, it can be observed that weak entanglement adds a large degree of complexity in attempting to reconstruct the original state via QST. For one, the entangled system is described by three qubits, where the distribution of the wave function is focused strongly in only the first control qubit, resulting in the other two qubits having small corresponding amplitudes. Additionally, the IBMQ processor results varied from AER simulation predictions by an average percent difference of 23.5% (the greatest of which is in the X-basis measurement), which is considerable given that it was the same circuit executed in both instances. Further IBMQ processor experimentation might reveal a trend in this phenomenon among weakly entangled states. Another interesting observation was that the execution time of the weakly entangled scheme versus the scheme part 2 reported by the IBM Quantum platform was over double (8s 952ms and 4s 318ms, respectively), which might suggest that weak entanglement may decrease the efficiency of quantum circuit execution. These observations contribute to one's understanding of why the maximally entangled Bell states have such high importance in quantum algorithm design since they highly correlate two qubits.