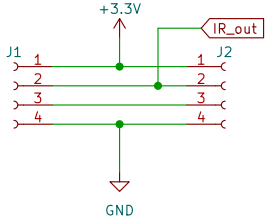

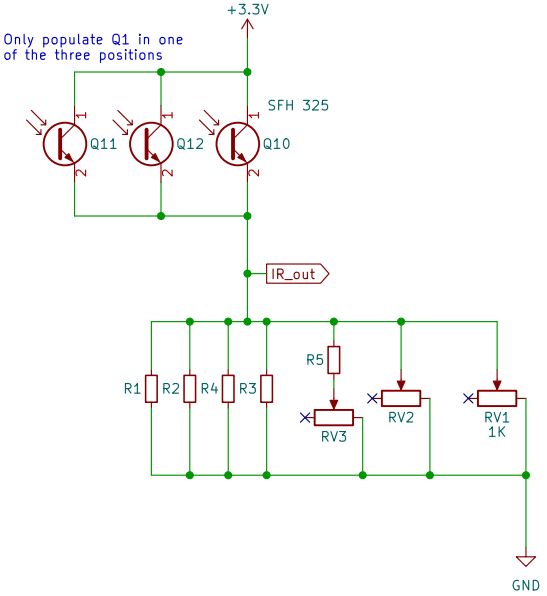

Sheet: /
File: Melty-daughter.kicad_sch

Title: Oreo IR Board

Size: A5	Date:	**Rev: 1.0**
KiCad E.D.A. kicad (6.0.5)		Id: 1/1