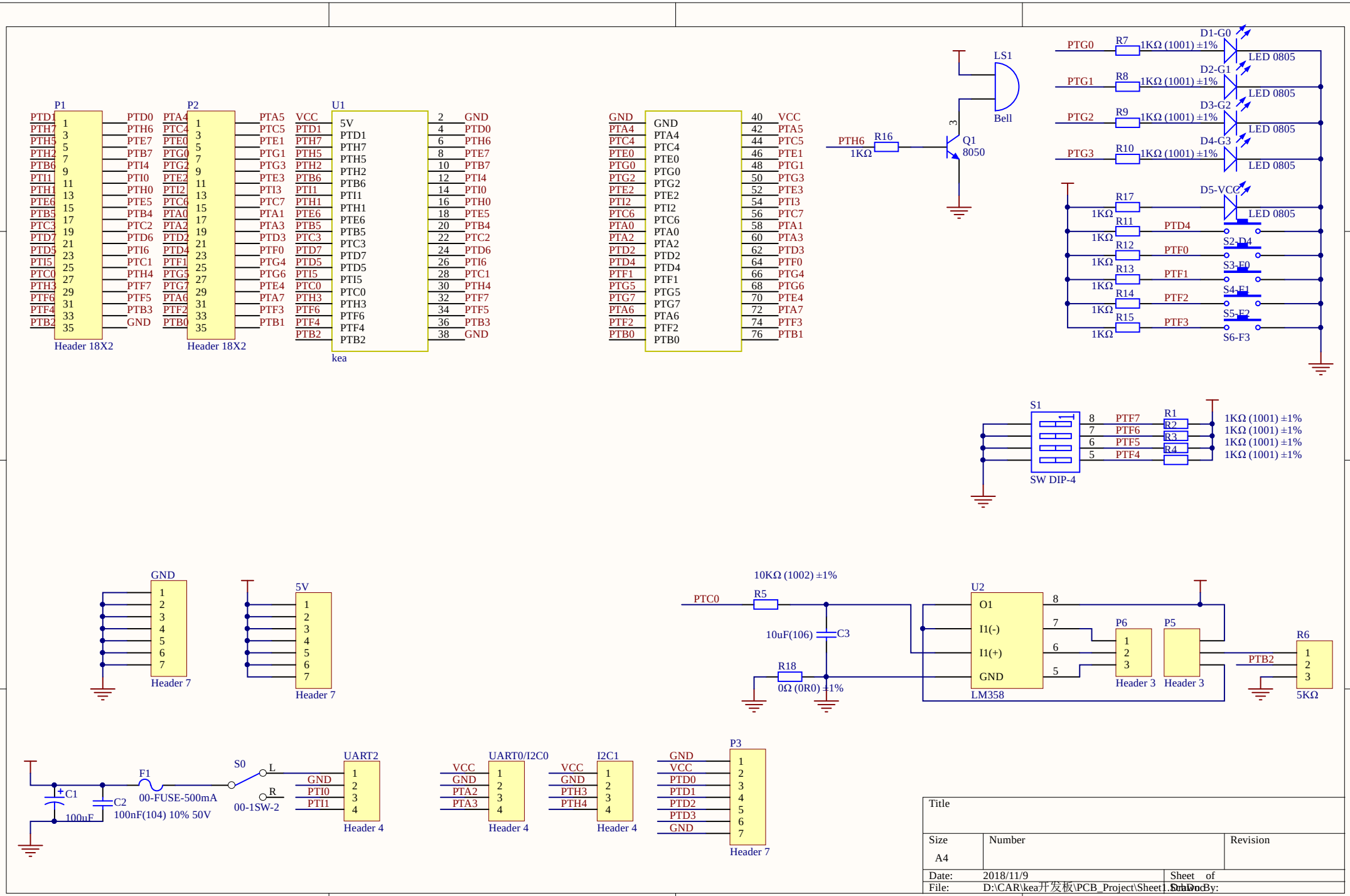

Title		
Size A4	Number	Revision
Date: 2018/11/9	Sheet of	
File: D:\CAR\kea开发板\PCB_Project\Sheet1.SchDoc	Drawn By:	