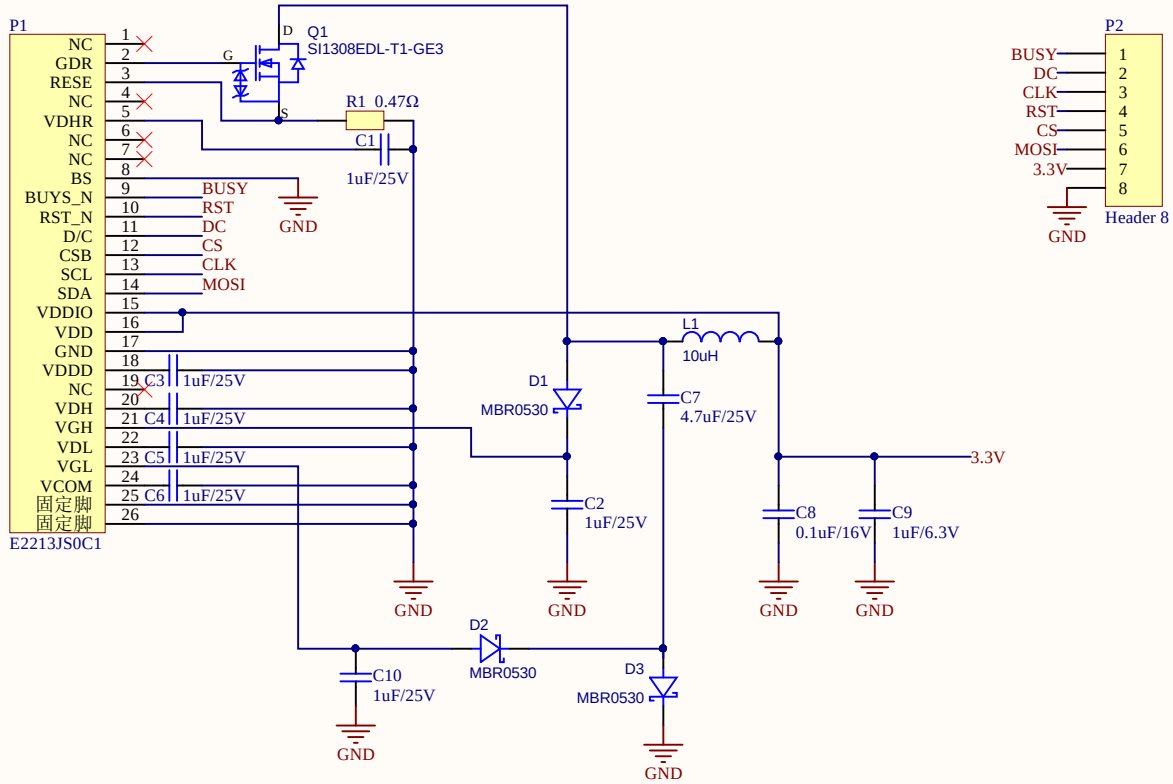

Title		
Size A4	Number	Revision
Date: 2022-01-16	Sheet of	
File: \\..\My_E-Paper_Driver_V1.0.0.SchDoc	Drawn By:	