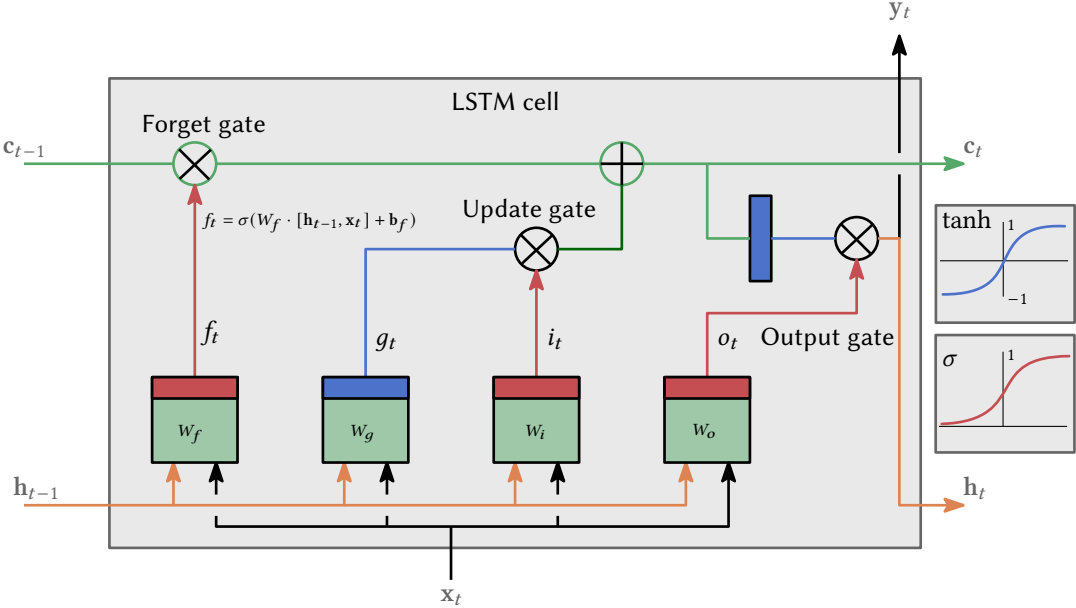
LSTM cell
Forget gate
Update gate
Output gate
$\mathbf{c}_{t-1}$
$\mathbf{c}_t$
$\mathbf{y}_t$
$\mathbf{h}_{t-1}$
$\mathbf{h}_t$
$\mathbf{x}_t$
$f_t = \sigma(W_f \cdot [\mathbf{h}_{t-1}, \mathbf{x}_t] + \mathbf{b}_f)$
f_t
g_t
i_t
o_t
W_f
W_g
W_i
W_o
tanh
1
−1
σ
1