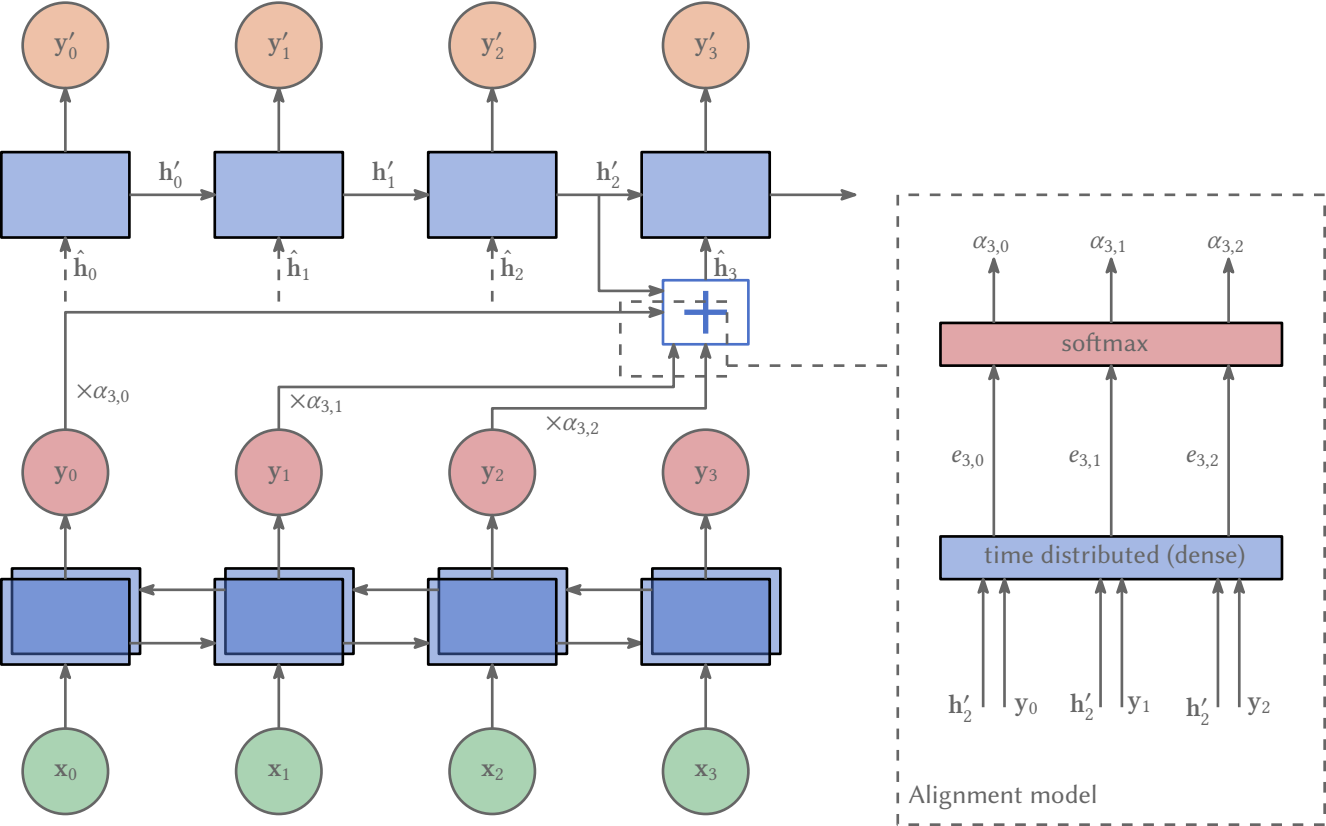
y'_0
y'_1
y'_2
y'_3
h'_0
h'_1
h'_2
$\hat{h}_0$
$\hat{h}_1$
$\hat{h}_2$
$\hat{h}_3$
$\times\alpha_{3,0}$
$\times\alpha_{3,1}$
$\times\alpha_{3,2}$
y_0
y_1
y_2
y_3
x_0
x_1
x_2
x_3
$\alpha_{3,0}$
$\alpha_{3,1}$
$\alpha_{3,2}$
softmax
$e_{3,0}$
$e_{3,1}$
$e_{3,2}$
time distributed (dense)
h'_2
y_0
h'_2
y_1
h'_2
y_2
Alignment model