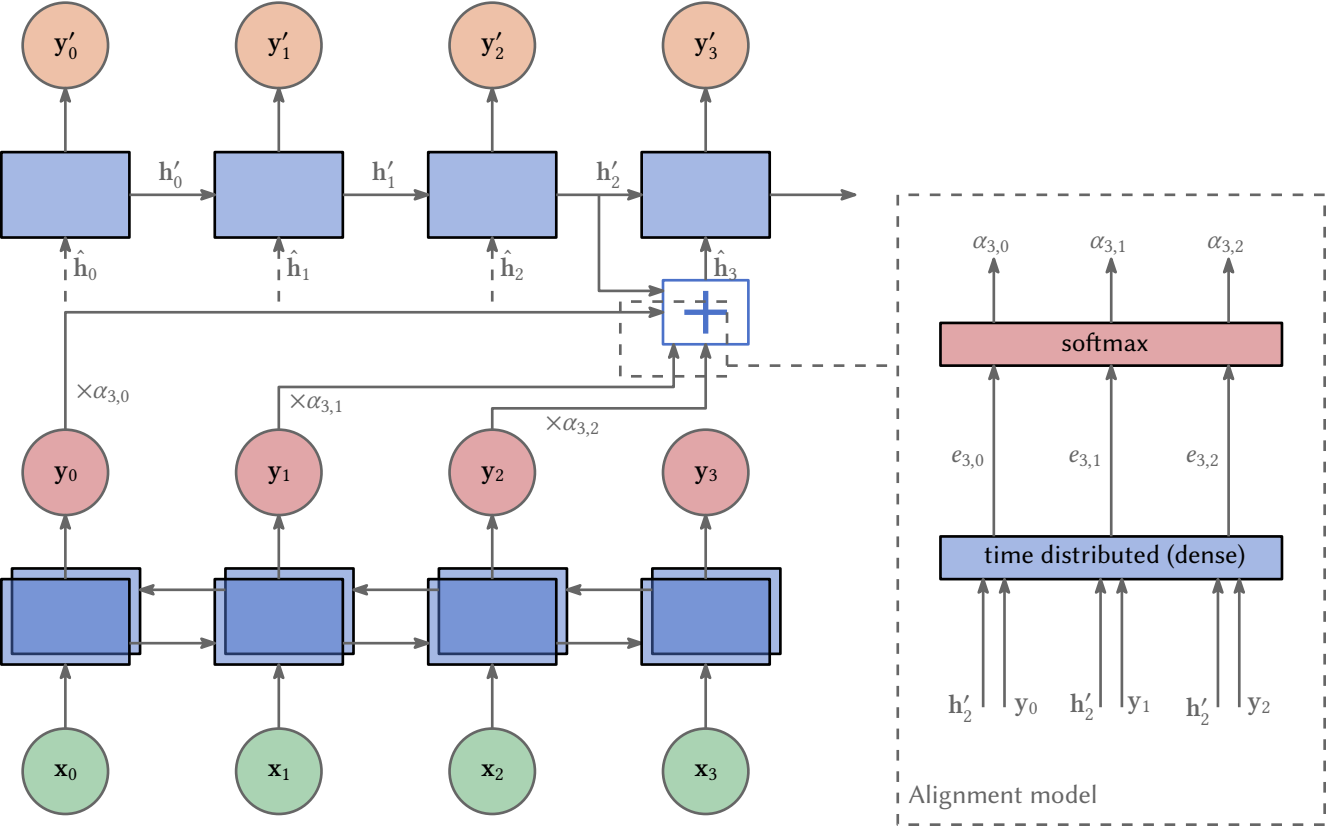
$\mathbf{y}'_0$
$\mathbf{y}'_1$
$\mathbf{y}'_2$
$\mathbf{y}'_3$
$\mathbf{h}'_0$
$\mathbf{h}'_1$
$\mathbf{h}'_2$
$\hat{\mathbf{h}}_0$
$\hat{\mathbf{h}}_1$
$\hat{\mathbf{h}}_2$
$\hat{\mathbf{h}}_3$
$\times\alpha_{3,0}$
$\times\alpha_{3,1}$
$\times\alpha_{3,2}$
$\mathbf{y}_0$
$\mathbf{y}_1$
$\mathbf{y}_2$
$\mathbf{y}_3$
$\mathbf{x}_0$
$\mathbf{x}_1$
$\mathbf{x}_2$
$\mathbf{x}_3$
$\alpha_{3,0}$
$\alpha_{3,1}$
$\alpha_{3,2}$
softmax
$e_{3,0}$
$e_{3,1}$
$e_{3,2}$
time distributed (dense)
$\mathbf{h}'_2$ $\mathbf{y}_0$
$\mathbf{h}'_2$ $\mathbf{y}_1$
$\mathbf{h}'_2$ $\mathbf{y}_2$
Alignment model