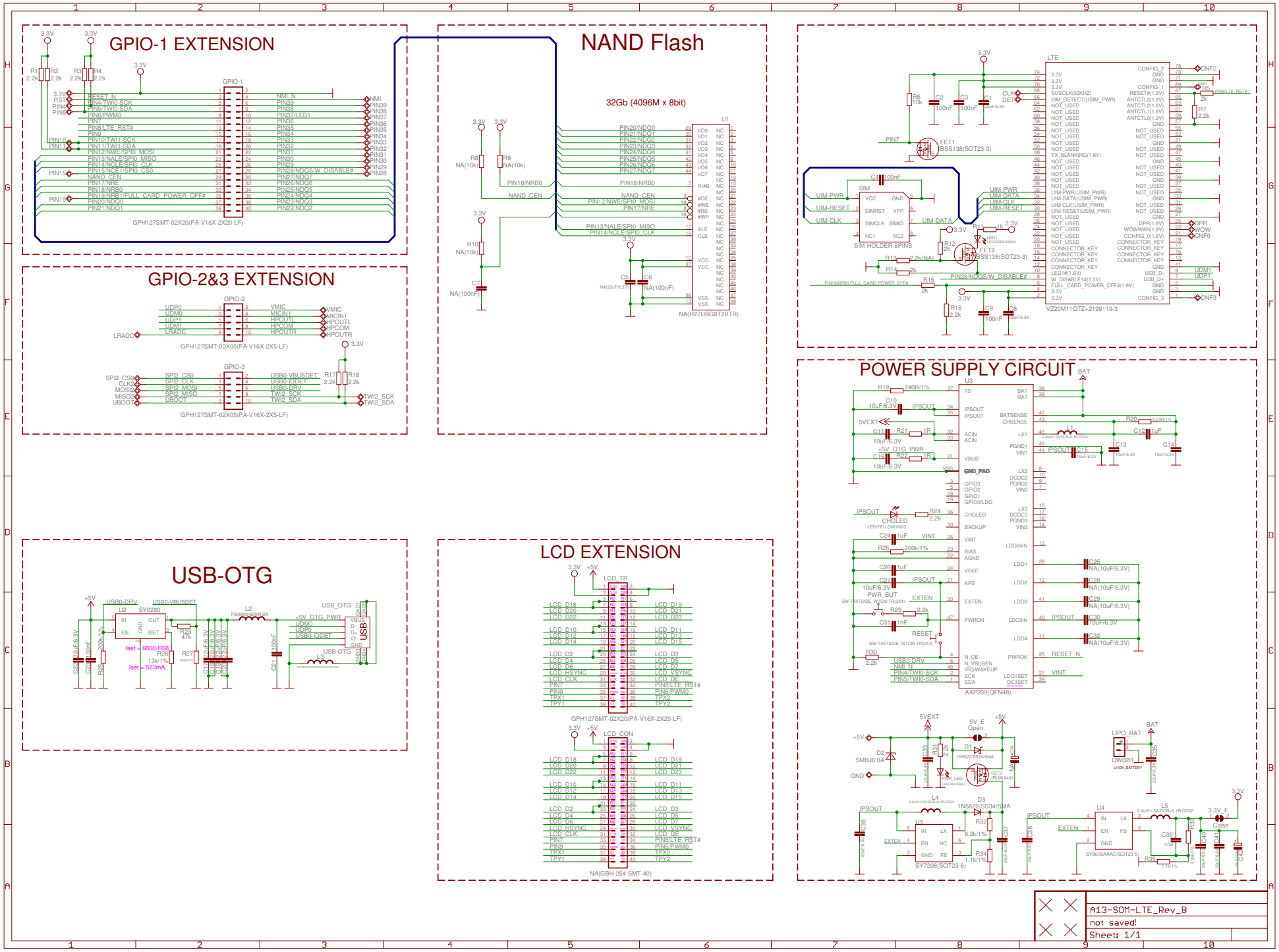
GPIO-1 EXTENSION
GPIO-1
GPH127SMT-02X20(PA-V16X-2X20-LF)
NAND Flash
32Gb (4096M x 8bit)
U1
NA(H27UBG8T2BTR)
GPIO-2&3 EXTENSION
GPIO-2
GPH127SMT-02X05(PA-V16X-2X5-LF)
GPIO-3
GPH127SMT-02X05(PA-V16X-2X5-LF)
LTE
VZ20M11QTZ+2199119-3
SIM-HOLDER-8PINS
POWER SUPPLY CIRCUIT
AXP209(QFN48)
USB-OTG
LCD EXTENSION
GPH127SMT-02X20(PA-V16X-2X20-LF)
NA(GBH-254-SMT-40)
A13-SOM-LTE_Rev_B
not saved!
Sheet: 1/1