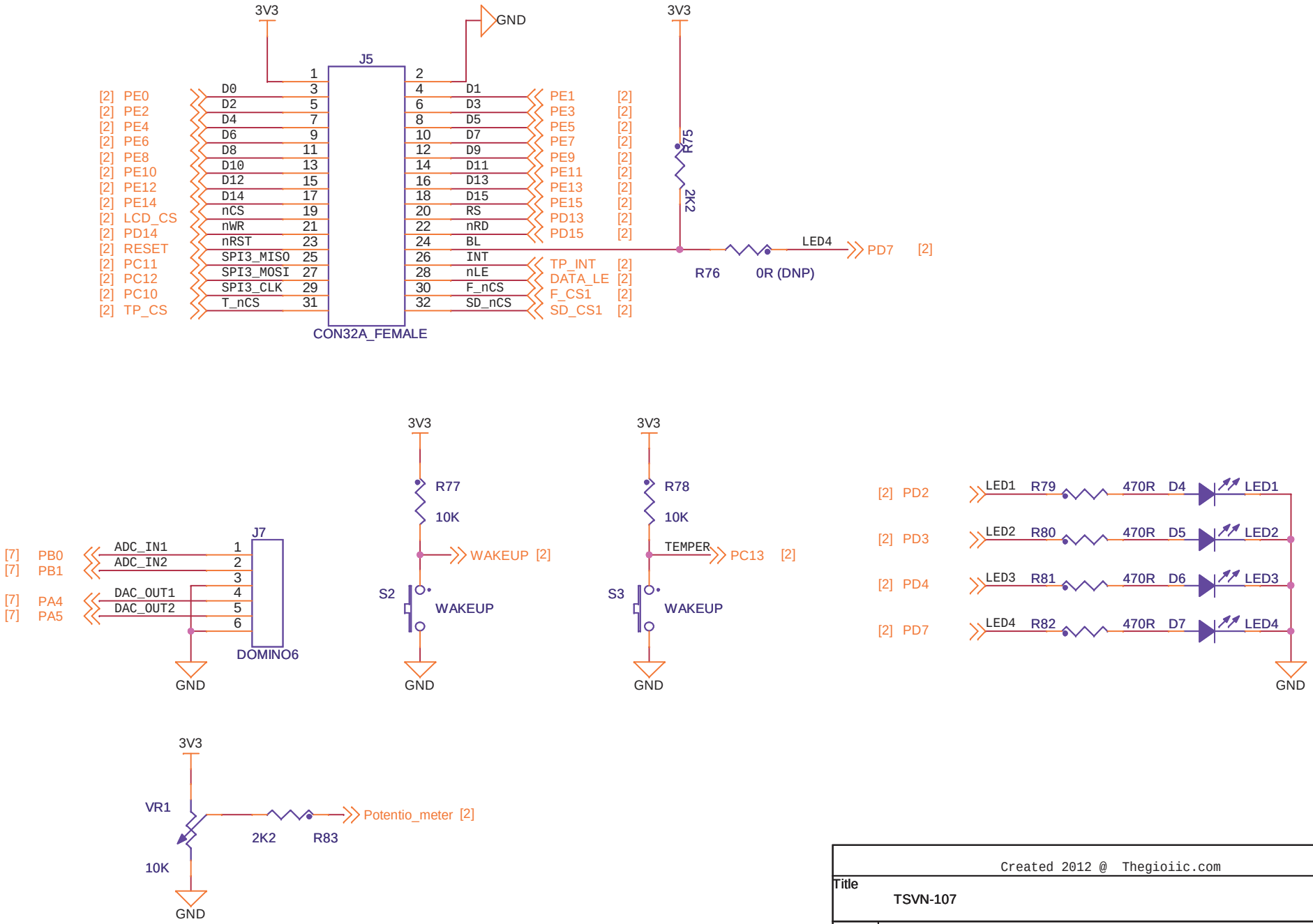

Created 2012 @ Thegioiic.com

Title	TSVN-107	
Size A	Document Number <Doc>	Rev A
Date: Monday, June 04, 2012	Sheet 7 of 8	