CONFIDENTIAL

Macro SEL Protection System

Version 0.1

Radiation-Tolerant Latch-up Detection and Recovery

Edge Computer for LEO Orbit

3-Year Mission Requirement

February 2026

Table of Contents

1. INTRODUCTION 4

2. SYSTEM ARCHITECTURE 4

2.1. Protection Strategy 4

3. POWER BUDGET 4

3.1. Input Power 4

3.2 Protected Rails 4

3.3. Protection Circuit Power Consumption 5

4. MAJOR COMPONENTS 5

4.1. Master Protection Switch 5

4.2. Op-Amps 5

4.3. Comparators 5

5. WIRED-AND ARCHITECTURE 6

6. CONTROL LOGIC 6

6.1. Blanking Window 6

6.2. SR Latch 6

6.3. Retry Timer 6

6.4. Enable Logic 6

7. BILL OF MATERIALS SUMMARY 7

8. DEFAULT POWER TREE 7

9. PROPOSED POWER TREE 7

10. CURRENT SENSING STAGE 8

10.1. Shunt Resistor 8

10.2. Difference Amplifier 9

11. VOLTAGE REFERENCE GENERATION 11

12. COMPARATOR STAGE 12

13. WIRED-AND BUS 12

14. SET LATCH FAULT 13

15. BLANKING TIMER 13

16. SR LATCH 15

17. RETRY TIMER 16

18. POWER ON RESET 18

19. RESET LOGIC 19

20. P-FET GATE DRIVER 20

21. RESPONSE TIME 22

REFERENCE 24

1. Introduction

This document describes the Macro SEL (macro single-event latch-up) protection system for a space-qualified edge computer designed for Low Earth Orbit (LEO) missions with a minimum 3-year operational requirement.

The system protects ARM Cortex-A72 CPUs, AI cores, DDR4 RAM, and eMMC storage built on advanced process nodes using commercial off-the-shelf (COTS) components rather than radiation-hardened alternatives.

2. System Architecture

2.1. Protection Strategy

The system employs a hardware-only autonomous protection approach:

- One master P-channel MOSFET (high-side, 5V input rail)
- Six independent current-sensing channels (one per downstream rail)
- Wired-AND comparator bus (any fault triggers global fault)
- Hardware-only infinite retries, ~1 second off between attempts
- 10ms blanking window after FET turn-on, masking inrush from mistaking to latch up
- SR latch maintains fault state during power loss to keep system off

3. Power Budget

3.1. Input Power

5V @ 5A maximum from the power source (25W total system budget)

3.2 Protected Rails

Trip current threshold is 150% of the rated current on each rail.

Rail	Voltage	Current	Load	Shunt	Trip Current (150%)
1	3.3V	5A	AI Core 1	10 mΩ	7.5A
2	3.3V	5A	AI Core 2	10 mΩ	7.5A
3	1.2V	3A	CPU + DDR4	10 mΩ	4.5A
4	1.35V	0.4A	CPU	50 mΩ	0.6A
5	1.8V	2A	CPU + eMMC	10 mΩ	3.0A
6	2.5V	1A	CPU + DDR4	10 mΩ	1.5A (150%)

.

3.3. Protection Circuit Power Consumption

All protection circuits powered from 5V_IN (single power domain):

- 2× OPA4H838-SEP op-amps: 5.2 mA
- 2× TLV1704-SEP comparators: 0.3 mA
- 4× Logic ICs (SN54SC series): 0.1 mA
- V_ref dividers (5 total): 0.5 mA
- Wired-AND pull-up resistor: 0.5 mA

Total: ~6.5 mA @ 5V = ~33 mW (0.13% of system budget)

Note: each ICs need a 100nF X7R 0402 ceramic decoupling capacitor between power pin to ground, place them as close to the package as possible.

4. Major Components

4.1. Master Protection Switch

Q1: BUP06CP038F-01 P-channel MOSFET

- Package: DPAK (TO-252AA)
- V_DSS: -55V
- I_D: -35A continuous, -140A pulsed
- R_DS(on): 38 mΩ typ @ Vgs = -4.5V
- TID: 30-50 krad(Si)
- SEE LET: 46 MeV·cm²/mg

4.2. Op-Amps

U_AMP_A, U_AMP_B: OPA4H838-SEP (quad op-amp)

- Package: TSSOP-14
- Supply: 2.5V - 5.5V (powered at 5V from 5V_IN)
- GBW: 10 MHz
- Slew rate: 5 V/µs
- Input offset: ±2.25 µV
- Offset drift: ±0.005 µV/°C (zero-drift technology)
- Input CM range: -0.1V to 5.1V (excellent headroom for 3.3V rails)
- TID: 30 krad(Si) RLAT
- SEE LET: 43 MeV·cm²/mg

4.3. Comparators

U_CMP_A, U_CMP_B: TLV1704-SEP (quad comparator)

- Package: TSSOP-14
- Supply: 2.2V - 24V (powered at 5V from 5V_IN)
- Propagation delay: 560 ns typical
- Output type: Open-drain (critical for wired-AND operation)
- TID: 30 krad(Si) RLAT
- SEE LET: 43 MeV·cm²/mg

5. Wired-AND Architecture

The design employs a critical architectural simplification using open-drain comparator outputs in a wired-AND configuration.

All six comparator outputs are tied together to a single bus wire with one 10kΩ pull-up resistor to 5V_IN. This creates an inherent AND function:

- When ALL comparators are Hi-Z (no faults): Bus pulled HIGH by resistor → GLOBAL_FAULT = HIGH
- When ANY comparator drives LOW (fault detected): Bus pulled to GND → GLOBAL_FAULT = LOW

6. Control Logic

6.1. Blanking Window

Handles input capacitor charging inrush:

- Triggered by ENABLE_GLOBAL rising edge (when FET turns ON)
- Duration: 12.2ms – 18.0ms (RC timing with component variation)
- Implementation: 10nF capacitor + 1MΩ resistor + Schmitt trigger
- Function: Masks fault detection during inrush period

6.2. SR Latch

Remembers fault occurrence even after rails collapse to 0V:

- IC: SN54SC4T00-SEP (quad 2-input NAND)
- Active-LOW inputs: SET_L and RESET_L
- Output: ENABLE GLOBAL (fault remembered)
- Critical function: Prevents immediate restart when rails collapse

6.3. Retry Timer

Holds system off for ~1 second after fault shutdown:

- RC circuit: 1.0MΩ + 2.2μF
- Delay range: 0.56s - 1.21s (component variation)
- Discharge transistor: Q_dis (JANSR2N3700UB NPN)
- Controlled by ENABLE_GLOBAL output

6.4. Enable Logic

Matches logic coming out of the latch to the logic driving P-MOSFET gate

Just one inverter gate

7. Bill of Materials Summary

Component	Part Number	Function	Qty
Q1	BUP06CP038F-01	Master P-FET	1
U_AMP	OPA4H838-SEP	Quad op-amp	2
U_CMP	TLV1704-SEP	Quad comparator	2
U_LATCH	SN54SC4T00-SEP	Quad NAND (latch)	1
U_OR	SN54SC4T32-SEP	Quad OR	1
U_SCH	SN54SC6T17-SEP	Hex Schmitt trigger	1
U_INV	SN54SC6T14-SEP	Hex Schmitt inverter	1
Q_dis	JANSR2N3700UB	NPN transistor	1

8. Default power tree

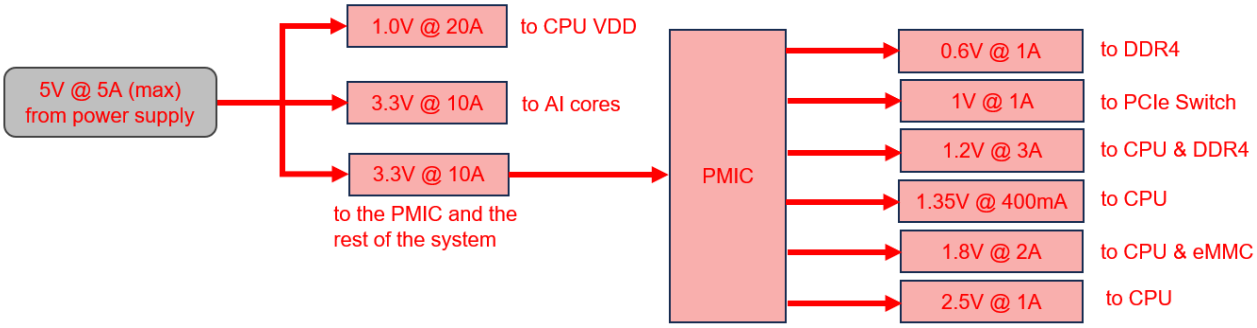

9. Proposed power tree

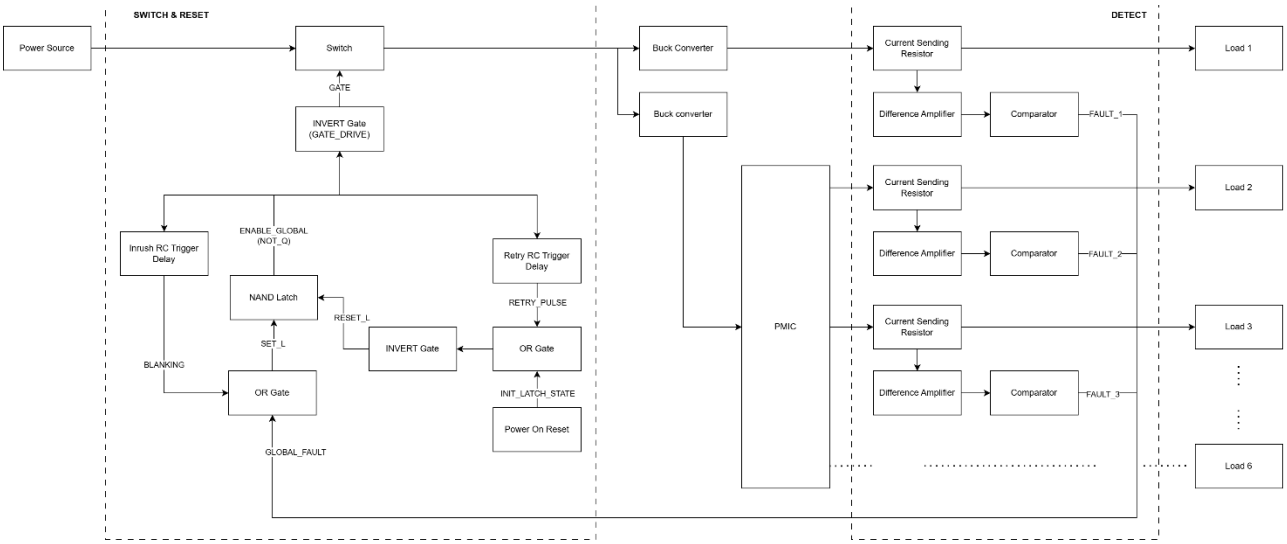

10. Current Sensing Stage

10.1. Shunt Resistor

The shunt resistor converts rail current into a measurable voltage drop:

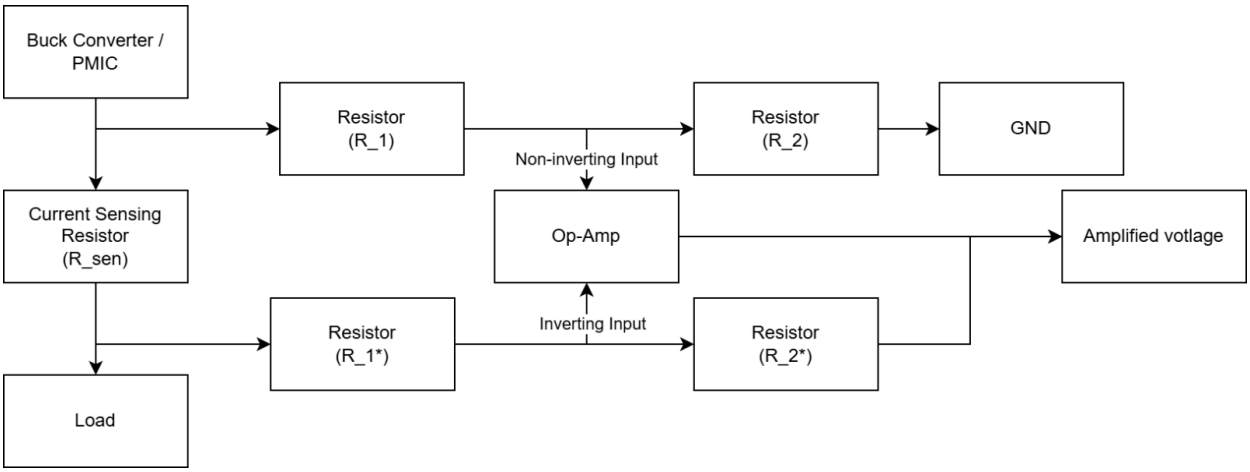

Component: WSL2512R0100FEA (shunt resistor)

- Resistance: 10 mΩ ± 1%
- Power rating: 2W
- Package: 2512 SMD with 4-wire Kelvin connection

Voltage drops:

- Normal (5A): V_drop = 5A × 10mΩ = 50mV (1.5% of 3.3V rail)
- Trip threshold (7.5A): V_drop = 7.5A × 10mΩ = 75mV

NOTE: consider using 0.1% tolerant resister

10.2. Difference Amplifier

4-resistor instrumentation amplifier topology converts small differential voltage into larger single-ended signal:

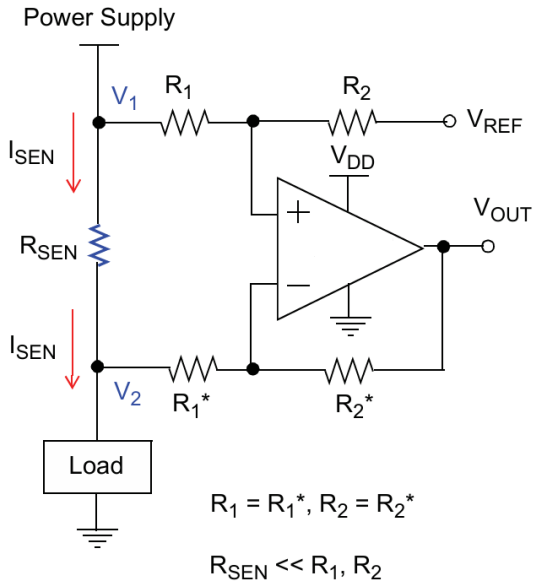

$R_1 = R_1^*$, $R_2 = R_2^*$

$R_{SEN} << R_1, R_2$

$$V_{OUT} = (V_1 - V_2) \cdot \left(\frac{R_2}{R_1}\right) + V_{REF}$$

Component: OPA4H838-SEP

The main concern of using the op-amp is the rated differential voltage between its two inputs. The OPA4H838-SEP is rated at +-0.2V differential limit and op-amp's inputs might exceed +-0.2V during transients. In those cases, the protective diode inside the op-amp fails and start conducting. So, it's imperative that the currents flowing into those inputs are limited to prevent damaging the op-amp.

In the worst case, the voltage at the op-amp inputs is 3.3V and with R_1 is 10kΩ, the maximum current is only 330uA and the dissipating power is 1.1mW. That is negligible. The protective structures in op-amps are typically rated to handle several milliamps continuously, and the transient duration here is microseconds, so the thermal stress is even smaller than that of during steady state.

To simplify the design of the comparison circuitry, all amplified current sensing voltage will be compared to the same reference voltage which is set to roughly 1V. So, the gain between different rails needs to be set differently.

Rail	I_trip	R_sen	V_sen	Gain_ideal	R2 (selected)	Gain_actual	V_trip
1	7.5A	10mΩ	75mV	13.33	133kΩ	13.18	988mV
2	7.5A	10mΩ	75mV	13.33	133kΩ	13.18	988mV
3	4.5A	10mΩ	45mV	22.22	221kΩ	21.90	985mV
4	0.6A	50mΩ	30mV	33.33	332kΩ	33.20	987mV
5	3.0A	10mΩ	30mV	33.33	332kΩ	33.20	987mV

6	1.5A	10mΩ	15mV	67.67	665kΩ	65.89	988mV

Rail 4 supplies 1.35V to the CPU. The CPU is sensitive to supply voltage and requires that the delivered voltage stay within ±5% of nominal, which is a tolerance window of ±67.5mV. Between the PMIC output and the CPU, voltage is dropped by three series elements: the shunt resistor, PCB trace resistance, and connector resistance. Unlike the shunt resistor, trace and connector resistance can be minimised through careful PCB layout, so the shunt resistor's contribution should be kept as small as possible.

A 10mΩ shunt on a 0.6A trip current produces only 6mV at the sense input, requiring a difference amplifier gain of 167 to reach the 1.0V comparator threshold. With the OPA4H838-SEP's 10 MHz GBW, this gives a bandwidth of 59.9 kHz and a theoretical output rise time of 5.84µs, a significant delay for a circuit whose purpose is to detect and interrupt fast Macro SEL events.

A 50mΩ shunt on the same 0.4A rated current produces a 20mV voltage drop at the load, consuming 30% of the ±67.5mV tolerance budget and leaving 47.5mV for trace and connector resistance. The required gain drops to 33.3 theoretically, giving a bandwidth of 300 kHz and an output rise time of 1.17µs, a 5× improvement in detection speed over the 10mΩ option.

Bandwidth and response time:

- GBW = 10 MHz (OPA4H838-SEP)
- BW = GBW / Gain
- t_rise = 0.35 / BW

Rail	Gain_actual	BW	T_rise
1	13.18	759kHz	0.46µs
2	13.18	759kHz	0.46µs
3	21.90	457kHz	0.77µs
4	33.20	301kHz	1.16µs
5	33.20	301kHz	1.16µs
6	65.89	152kHz	2.3µs

The op-amps are powered directly from the power source. This ensures the sensing and detection logic remains active and in a deterministic state throughout both shutdown and the recovery hold period.

11. Voltage Reference Generation

V_ref provides the threshold voltage for fault detection. Target is ~1.0V to match V_AMP at 150% current.

NOTE: Rails 1 & 2 share ONE V_ref divider (both are 3.3V/5A with identical trip points).

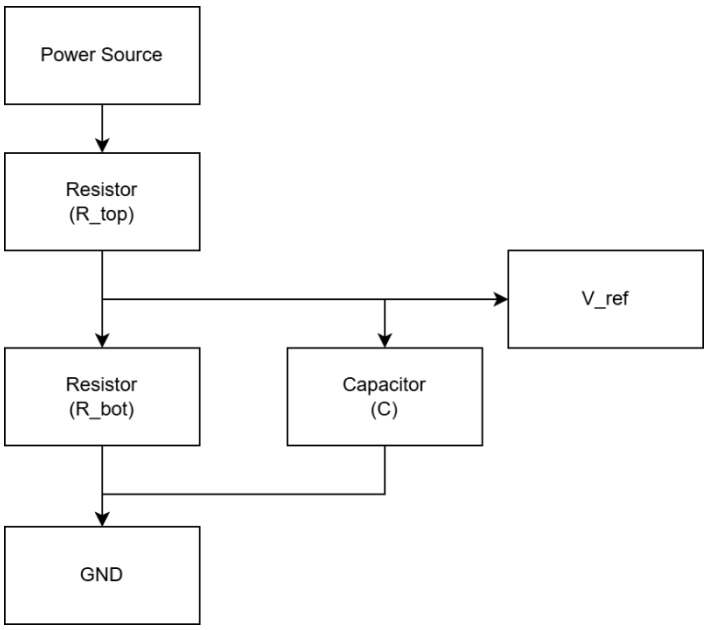

R_top = 40.2 kΩ and R_bot = 10 kΩ, resulting in:

$$V_{ref} = \frac{R_{bot}}{R_{top} + R_{bot}} \times 5V_{IN} = \sim 0.996V$$

A 100 nF ceramic (X7R, 0402) decoupling capacitor is placed from each V_ref node to GND, located within 2 mm of the comparator non-inverting pin. This serves two purposes. It filters switching noise injected back onto the V_ref node from the comparator output transitions. Also, it attenuates noise from the shared power supply 5V_IN rail, which supplies other circuits, from propagating forward into the reference voltage. The capacitor forms a low-pass filter with R_top (~40 Hz corner frequency), effectively shorting high-frequency disturbances to GND before they reach the comparator input.

Reference Voltage Supply Dependence and Trip Threshold Variation

The comparator trip threshold is set by V_ref, which is derived from the 5V_IN power source through a resistor divider. V_ref therefore tracks the supply voltage linearly. In contrast, the amplified sense voltage V_AMP_n is produced by load current flowing through the shunt resistor and is independent of the supply voltage.

The fault trip condition occurs when V_AMP_n = V_ref. Solving for trip current:

I_trip = V_ref / (R_sen × Gain) = V_supply × (R_bot / (R_top + R_bot)) / (R_sen × Gain)

Because V_AMP_n is supply-independent while V_ref is not, any variation in the supply voltage directly shifts the trip threshold:

- If the supply sags by 5%, V_ref drops by 5% and the trip threshold drops to 142.5% of rated current. The system becomes more sensitive and may trigger spurious shutdowns during legitimate load transients.

- If the supply surges by 5%, V_ref rises by 5% and the trip threshold rises to 157.5% of rated current. The system becomes less sensitive and requires marginally higher overcurrent to detect a fault.

At the designed 150% nominal threshold, a ±5% supply variation shifts the trip point by ±7.5% of rated current. Given that the 150% threshold already provides substantial margin above normal peak operating current, this variation is acceptable.

12. Comparator Stage

The comparator with open-drain output detects when amplified signal exceeds threshold:

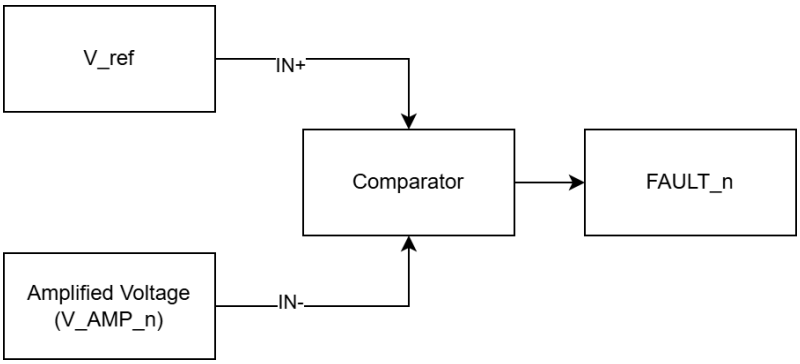

Component: TLV1704-SEP

Comparator logic:

- Non-inverting input, IN+ = V_ref
- Inverting input, IN- = V_AMP_n (variable, tracks rail current)

Operation:

- Normal: V_AMP_n < V_ref → IN+ > IN- → Output Hi-Z
- Fault: V_AMP_n > V_ref → IN+ < IN- → Output drives LOW

13. Wired-AND Bus

All 6 comparator outputs tied together with single 10kΩ pull-up resistor:

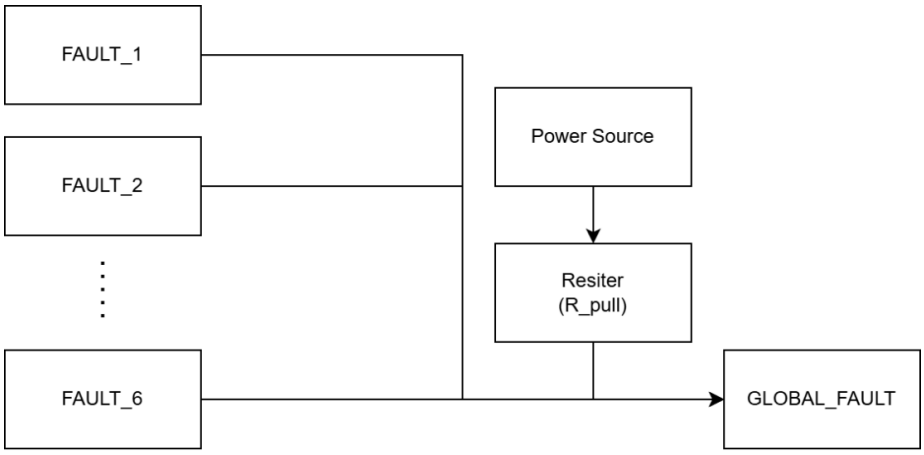

Component: 10kΩ pull-up resistor

Bus signal states:

- ALL rails normal (all 6 comparators Hi-Z), R_pull conducts, bus = HIGH (~5V)
- 1 rail faults (1 comparator drives LOW), bus = LOW (~0V)
- Multiple rails fault: All share pull-down current, bus = LOW
- During shutdown on fault (all V_AMP = 0V), comparators output Hi-Z, bus = HIGH. This is false "no fault" state, the bus should stay LOW for ~1s. This is why the output of the comparator can't directly drive the switch, leading to the use of the latch to remember the fault.

14. Set latch fault

OR gate combines fault signal with blanking timer to mask faults during inrush:

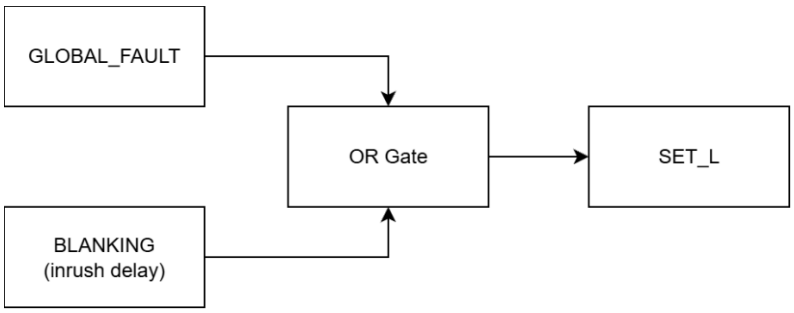

Component: SN54SC4T32-SEP (4x 2-input OR)

Truth table:

GLOBAL_FAULT	BLANKING	SET_L
HIGH	HIGH	HIGH (Startup: faults masked)
HIGH	LOW	HIGH (Normal: no fault)
LOW	HIGH	HIGH (Startup: faults masked)
LOW	LOW	LOW (Real fault: trigger latch)

During blanking window, even if inrush triggers GLOBAL_FAULT = LOW, the OR gate keeps SET_L = HIGH (inactive), preventing false shutdown.

15. Blanking Timer

Generates 10ms HIGH pulse starting when ENABLE_GLOBAL rises (FET turns ON) to mask fault detection, allowing inrush current to settle. Without this, the inrush current can trip the fault detection, resulting in rapid ON/OFF cycle, never achieving stable operation.

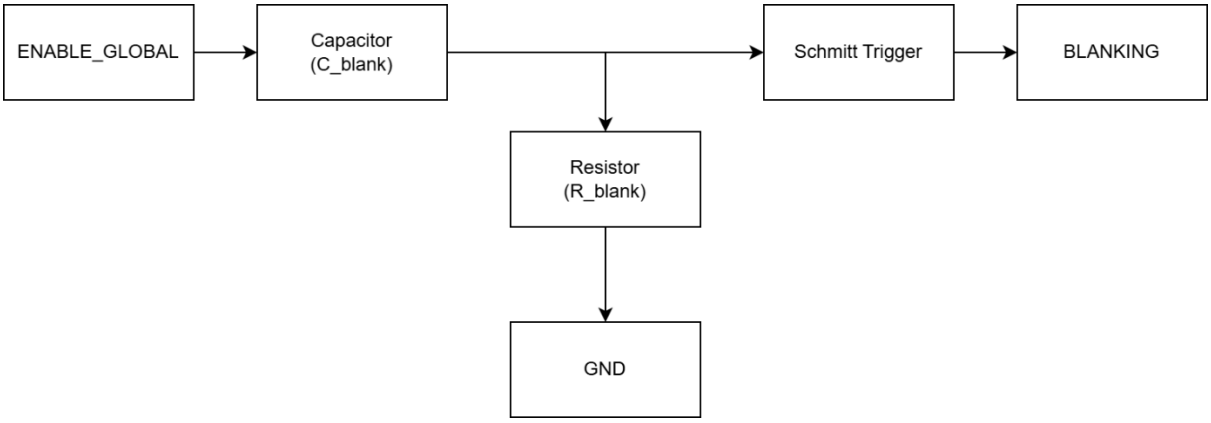

Component: SN54SC6T17-SEP (Schmitt trigger), R_blank =1MΩ and C_blank=10nF

Operation:

- **The Rising Edge (FET Turns ON):** When ENABLE_GLOBAL transitions from LOW to HIGH, the fast-rising edge contains high-frequency AC components. The 10nF capacitor acts momentarily as a short circuit to this edge, coupling the voltage spike directly to Schmitt trigger input.
- **Triggering:** Schmitt trigger's input instantly spikes high (around 3.5V). Because this is well above the Schmitt buffer's positive-going threshold V_T+, the buffer's output (BLANKING) snaps HIGH immediately.
- **The Discharge Phase:** Once ENABLE_GLOBAL settles at a steady 5V (DC), the capacitor blocks the DC current. The voltage at input of the Schmitt trigger now discharges down to 0V through the 1MΩ resistor. The RC time constant is 10ms (R_blank x C_blank = 1MΩ x 10nF).
- **The Falling Edge (Window Closes):** As the voltage at the input of the Schmitt trigger decays, it eventually crosses the Schmitt trigger's negative-going threshold V_T-. The discharging rate is governed by the equation below:

  $$V(t) = V_initial \times e^{\frac{-t}{RC}}$$

  Solving for when the voltage crosses the V_T- downward:

  $$t = RC \times \ln\left(\frac{V_initial}{V_T-}\right)$$

  Assuming V_initial = ~3.5V (edge-coupled spike, not full 5V):

  - Min blanking (V_T- = 1.029V): t = 10ms × ln(3.5 / 1.029) = ~12.2ms
  - Typ blanking (V_T- = 0.755V): t = 10ms × ln(3.5 / 0.755) = ~15.3ms
  - Max blanking (V_T- = 0.581V): t = 10ms × ln(3.5 / 0.581) = ~18.0ms

  The blanking window ends after approximately 12.2ms to 18.0ms.

- When ENABLE_GLOBAL goes from HIGH to LOW (FET turns OFF), the capacitor couples that negative edge. However, Schmitt trigger's input is already resting at 0V. The negative spike has no effect on the Schmitt trigger's positive-logic output, so no false blanking pulse is generated during shutdown.

Logic Integration:

This active-HIGH BLANKING pulse is fed into an OR gate alongside the active-LOW GLOBAL_FAULT signal. During the ~10ms window, the HIGH BLANKING signal forces the OR gate's output (SET_L) to remain HIGH, completely overriding any LOW fault signals triggered by the inrush current.

16. SR Latch

Cross-coupled NAND gates remember fault state during power loss:

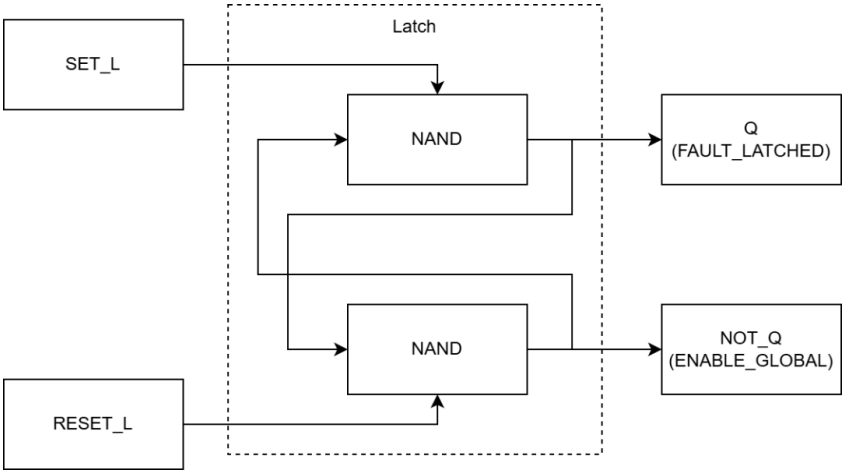

Component: SN54SC4T00-SEP (4x 2-input NAND), uses gates 1 and 2

Operation:

2 NAND gates make an active LOW SR latch

SET_L	RESET_L	Action	FAULT_LATCHED	ENABLE_GLOBAL
HIGH	HIGH	Hold (no change)	Previous state	Previous state
LOW	HIGH	SET (latch fault)	HIGH	LOW
HIGH	LOW	RESET (clear fault)	LOW	HIGH
LOW	LOW	Invalid (avoid)	Undefined	Undefined

When a fault is detected, V_AMP_n exceeds V_ref and the comparator pulls GLOBAL_FAULT LOW on the open-drain fault bus. The SR latch immediately sets, asserting FAULT_LATCHED HIGH. This drives ENABLE_GLOBAL LOW, turning the P-FET off and cutting power to the protected rails.

With the rails at 0V, V_AMP collapses, and the comparator releases the open-drain bus. R_pull returns GLOBAL_FAULT HIGH, but the SR latch holds FAULT_LATCHED HIGH independently of the bus state, keeping the FET off. This is intentional: decoupling capacitors on the rails must fully discharge to extinguish any residual latch-up current, and the protection circuit must not interpret the collapsed sensing signal as a "no fault" condition.

After approximately 1 second, the reset signal will arrive to clear the SR latch. FAULT_LATCHED goes LOW, ENABLE_GLOBAL returns HIGH, and the P-FET turns back on. The rising edge of ENABLE_GLOBAL immediately triggers the 10ms blanking window, suppressing comparator activity during the subsequent inrush transient.

Logic integration:

When rails collapse to 0V, GLOBAL_FAULT goes HIGH, but latch holds FAULT_LATCHED = HIGH or ENABLE_GLOBAL = LOW, keeping system off until retry timer resets it.

17. Retry Timer

Holds system off for roughly 1 second after fault triggers shutdown then the system turns on:

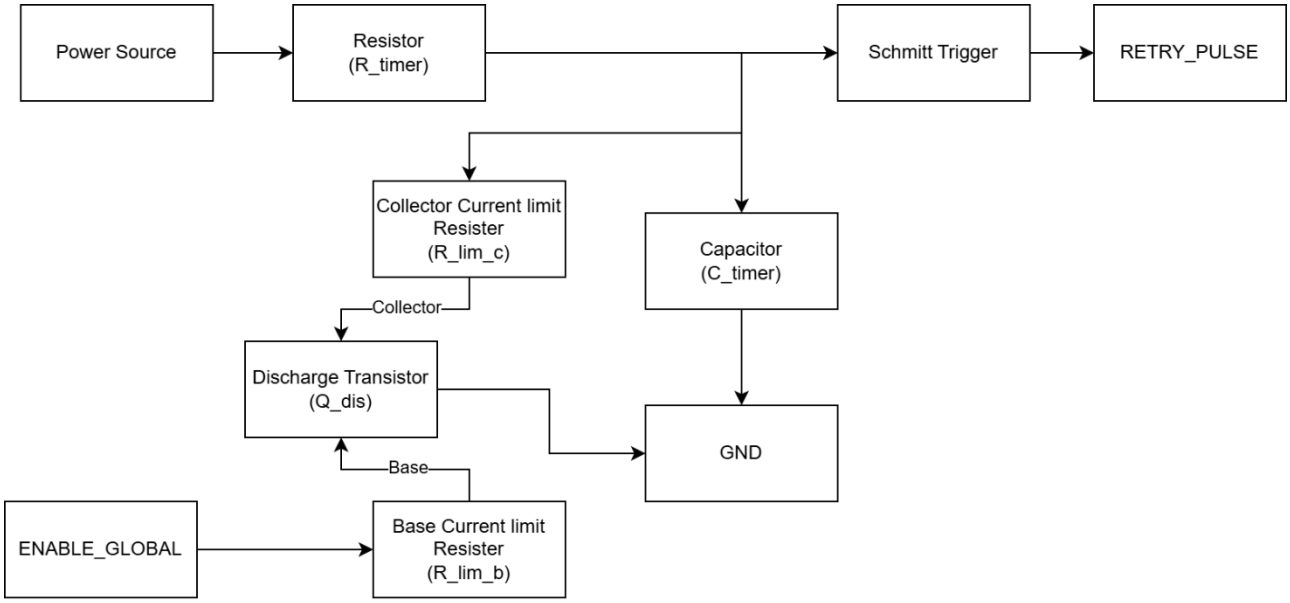

Component:

- SN54SC6T17-SEP (Schmitt trigger, share the same IC as blanking),
- JANSR2N3700UB (NPN transistor),
- R_lim_c (100Ω), R_lim_b (4k7Ω), R_timer (1.0MΩ) and C_timer (2.2μF),

Operation:

The RC Timing

The idea of this delay is a simple analog RC timing circuit, controlled by the logic state of the system.

- **The Timer:** Formed by R_timer (1.0MΩ) and C_timer (2.2μF) making a RC integrator.
- **The Switch:** Q_dis (the NPN transistor) acts as an electronic valve that either holds the timer at zero or lets it run.
- **The Reader:** The Schmitt trigger buffer (SN54SC6T17-SEP) monitors the capacitor's voltage and snaps cleanly to a HIGH logic state only when a specific voltage threshold is reached.

Phase 1: Normal Operation

During normal operation, the timer should be disabled so it isn't constantly trying to reset the system.

- ENABLE_GLOBAL is HIGH (no fault).

- This HIGH signal hits the base of the discharge transistor (Q_dis), turning it **ON**.
- The transistor shorts the capacitor directly to GND. The voltage at the Schmitt trigger input stays clamped at 0V, keeping RETRY_PULSE LOW.

Phase 2: A Fault Occurs (The Delay Starts)

When a latch-up event is detected, the system shuts down and needs to wait for the latch-up current to dissipate before turning back on.

- ENABLE_GLOBAL snaps LOW.
- The LOW signal turns the discharge transistor (Q_dis) **OFF**.
- With the short to ground removed, the 5V power source begins charging the 2.2uF capacitor through the 1.0MΩ resistor. The RC time constant is **R_timer x C_timer = 2.2s**.

Phase 3: The Threshold is Reached (Release Retry)

- The Schmitt trigger is watching the rising voltage on the capacitor.
- Depending on the exact IC tolerances, its positive-going threshold V_T+ will be somewhere between 1.43V and 2.71V (typically 2.00V).
- It takes roughly **0.56 to 1.21 seconds** for the charging capacitor to hit this voltage. The capacitor starts charging from 0V toward VCC. The charging rate is calculated by:

$$V(t) = VCC \times \left(1 - e^{\frac{-t}{RC}}\right)$$

Solving for when it crosses V_T+:

$$t = RC \times \ln\left(\frac{VCC}{VCC - V_T+}\right)$$

At VCC = 5V, using SN54SC6T17-SEP thresholds:

  - Min delay (VT+ = 1.121V): t = 2.2 × ln(5 / (5 - 1.121)) = ~0.56s
  - Typ delay (VT+ = 1.51V): t = 2.2 × ln(5 / (5 - 1.51)) = ~0.79s
  - Max delay (VT+ = 2.118V): t = 2.2 × ln(5 / (5 - 2.118)) = ~1.21s
- The instant it crosses V_T+, the Schmitt trigger's output (RETRY_PULSE) snaps HIGH.

Current limit: for Q_dis (R_lim_b = 4k7Ω, R_lim_c = 100Ω), Q_dis must discharge C_timer reliably between retry cycles while keeping base and collector currents within the transistor's absolute maximum ratings.

Base current (R_lim_b)

- When ENABLE_GLOBAL is HIGH (~4.9V from the CMOS latch output), Q_dis turns on. The base current is I_B = (4.9V − V_BE) / R_lim_b = (4.9V − 0.7V) / 4k7Ω = ~0.89 mA.
- For reference, at the transistor's absolute maximum collector current of 1 A, the datasheet minimum hFE is 15, meaning a base current of I_B = 1A / 15 =

~67mA would be needed to saturate at that extreme. The 0.89mA base drive is far below this and safely within ratings.

Collector current (R_lim_c)

- Q_dis turns on after each retry event, when C_timer has charged to the Schmitt trigger's positive threshold V_T+. The expected collector current and required hFE across the V_T+ tolerance range are:

Condition	V_T+	I_C (= V_T+ / R_lim_C)	Required hFE (= I_C / I_B)
Min	1.121V	11.21mA	12.54
Typ	1.510V	15.10mA	16.90
Max	2.118V	21.18mA	23.70

- The JANSR2N3700UB guarantees a minimum hFE of 90 at I_C = 10mA. Since the worst-case required hFE (23.70) is well below the transistor's guaranteed minimum, the transistor is guaranteed to saturate under all normal operating conditions.
- As a failure-mode bound, if C_timer were to charge fully to 5V (e.g., a logic failure preventing a retry pulse), I_C = 5V / 100Ω = 50mA, which is still within the 1A absolute maximum. In this case the required hFE rises to 50mA / 0.89mA = ~55.95, which is still well below the minimum hFE

Discharge time

- R_lim_c and C_timer form the discharge RC path. The capacitor discharges to near zero in 3τ = 3 × 100Ω × 2.2μF = 660μs. As the system is designed to stay off for roughly 1s, an additional sub-millisecond delay is negligible.

Logic Integration:

The RETRY_PULSE signal then passes through an INVERT gate before feeding into the RESET_L of the SR latch as the latch is active low.

- RETRY_PULSE (HIGH pulse) → Inverter → RESET_L (LOW pulse)
- SR latch sees LOW on RESET_L → resets to ENABLE_GLOBAL = HIGH

18. Power on Reset

Sets the initial state of the latch as when first powering on, the output of the latch is indeterministic, and the latch's output is used to control the blanking window and the retry reset. In the ideal case, the ENABLE_GLOBAL should snap from LOW to HIGH, which turns on the FET, stops the retry circuit from restarting the system and triggers the blanking. If the ENABLE_GLOBAL stays LOW, the FET stays off, the system won't turn on, however, since the ENABLE_GLOBAL is LOW, the retry reset starts charging and after roughly 1s, it will send the reset signal to the latch and let the system on.

For a reliable way to turn on the system, the Power on Reset circuitry will send a pulse to RESET_L of the latch to properly reset the latch every time power is first delivered to the system.

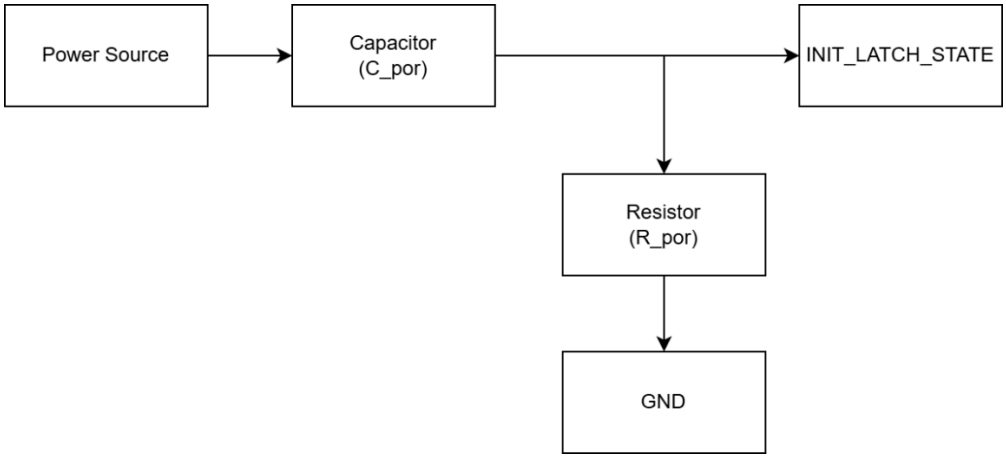

Components: C_por (100nF) and R_por (100kΩ)

Operation:

- Before plugging in the system to the power source, INIT_LATCH_STATE = 0V.
- When power is connected and starts rising, the fast-rising edge contains high-frequency AC components. The 100nF capacitor acts momentarily as a short circuit to this edge, coupling the voltage spike directly. INIT_LATCH_STATE spikes HIGH.
- Once power settle, the capacitor blocks the DC current. 100nF C_por discharges through 100kΩ R_por, making INIT_LATCH_STATE decays to 0V
- The RC time constant is **R_por x C_por = 10ms** (much longer than needed for latch reset)

Note: The Power on Reset only works if the power rises sharply, if for some reason, the power source has soft start, that might not enough to trigger the INIT_LATCH_STATE. In that case, the system will fall back on the retry delay circuitry.

Logic Integration:

The INIT_LATCH_STATE signal then passes through an INVERT gate before feeding into the RESET_L of the SR latch. This is because that the latch is active low.

- INIT_LATCH_STATE (HIGH pulse) → Inverter → RESET_L (LOW pulse)
- SR latch sees LOW on RESET_L → resets to ENABLE_GLOBAL = HIGH

19. Reset Logic

An OR gate to combine the 2 reset signals from the retry delay and the power on reset.

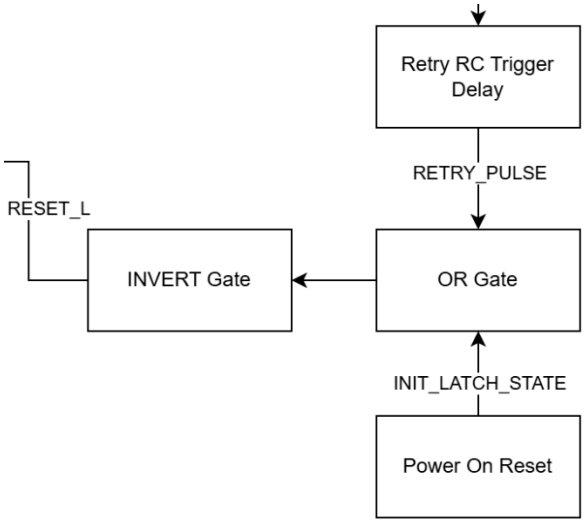

Component: SN54SC4T32-SEP (4x 2-input OR, share the same IC with SET_L)

Operation:

RETRY_PULSE	INIT_LATCH_STATE	RESET_L
LOW (no fault)	LOW (stable power)	HIGH (work normal)
HIGH (turn system on after fault)	LOW (stable power)	LOW (restart after fault)
LOW (no fault)	HIGH (first power up)	LOW (first power up)
HIGH (turn system on after fault)	HIGH (first power up)	LOW (first power up)

Logic integration:

On power up, the latch gets reset and during that window, all the fault signals are masked, once power becomes stable, the power on reset circuitry is essentially disable. The masking window during first power up matches with the blanking window, so the logic is unchanged.

20. P-FET Gate Driver

Inverts ENABLE_GLOBAL and drives P-channel MOSFET gate:

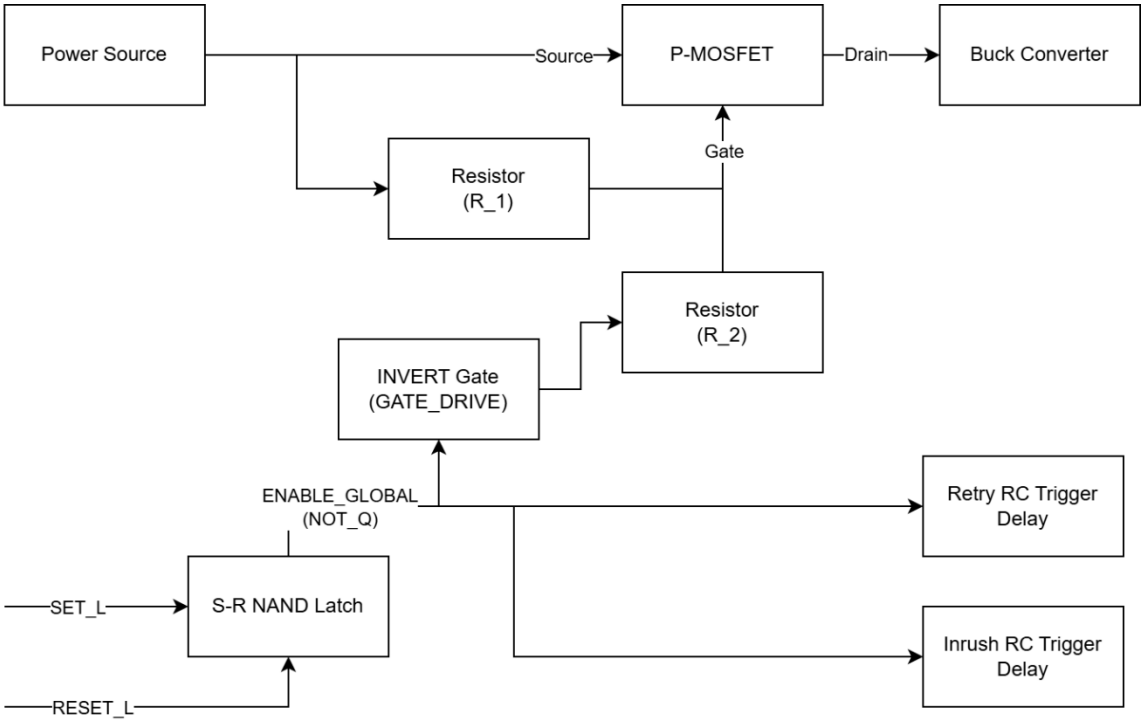

Components:

- R1 (10kΩ): Pull-up to 5V, ensures fail-safe OFF if driver loses power
- R2 (100Ω): Series resistor limits gate current, controls dV/dt
- BUP06CP038F-01 P-channel MOSFET
- SN54SC6T14-SEP inverter

Gate driver logic:

- ENABLE_GLOBAL = HIGH: GATE_DRIVE = LOW → Vgs = -5V → FET ON
- ENABLE_GLOBAL = LOW: GATE_DRIVE = HIGH → Vgs = 0V → FET OFF

Switching timing:

The FET has an internal gate-source capacitance C_GS. With the gate series resistor R2, this forms an RC circuit that controls how fast Vgs can change. The RC time constant is: τ = R2 × C_GS = 100Ω × 2.5nF = **250ns**

This is a P-channel FET with its source tied to 5V_IN. The gate is driven between 0V (FET on) and 5V (FET off) by the inverter. Therefore, Vgs is always negative or zero — it swings between −5V (fully on) and 0V (fully off).

Turn-on (fault cleared, power restored):

The inverter output goes LOW, pulling the gate from 5V down toward 0V, charging Vgs transitions from 0V toward −5V:

$$Vgs(t) = -5V \times \left(1 - e^{\frac{-t}{RC}}\right)$$

The FET begins conducting when Vgs crosses the threshold, Vgs_th = −2V (typical):

$$t = RC \times \ln\left(\frac{-5}{-5 - Vgs_th}\right) = 250ns \times \ln(5/3) = \sim 128ns$$

So, the FET is effectively on after approximately **130ns**.

Turn-off (fault detected, power cut):

The inverter output goes HIGH, pulling the gate from 0V up toward 5V. Vgs discharges from −5V back toward 0V:

$$Vgs(t) = -5V \times e^{\frac{-t}{RC}}$$

The FET stops conducting when Vgs rises back above the threshold, Vgs_th = −2V:

$$t = RC \times \ln\left(\frac{-5}{Vgs_th}\right) = 250ns \times \ln(5/2) = \sim 229ns$$

So, the FET is effectively off after approximately **230ns**. Turn-off is slower than turn-on because the gate must rise through a larger voltage swing before crossing the threshold.

Worst case for both directions:

Using the conservative 3τ criterion (gate voltage reaches 95% of its final value):

t_worst = 3 × 250ns = **750ns = 0.75µs**

This worst-case figure is used in the total system response time calculation, as it bounds both turn-on and turn-off regardless of threshold variation.

21. Response time

The total response time is the sum of all propagation delays along the fault detection and switch-off path:

Stage	Delay
Amplifier rise delay (worst case)	2.30 µs
Comparator propagation delay	0.56 µs
Logic gate delays (OR + SR latch + inverter)	~0.03 µs
P-channel MOSFET turn-off delay	0.75 µs
Total	**3.64 µs**

The dominant contributors are the amplifier and MOSFET switching delays, accounting for ~84% of the total response time. The combined logic gate delays (~30 ns) are negligible in comparison.

22. Testing

Use commercial components to build a prototype for testing the logic and functionality of the design.

Part Number	Function	Prototype Part	Prototype Qty
BUP06CP038F-01	Master P-FET	IPD380P06NMATMA1	1
OPA4H838-SEP	Amplifier	OPA325IDBVT	1
TLV1704-SEP	Comparator	TLV1704AIPWR	1
SN54SC4T00-SEP	NAND gate	SN74HC00APWR	1
SN54SC4T32-SEP	OR gate	SN74HC32PWR	1
SN54SC6T17-SEP	Schmitt trigger	SN74LV6T17PWR	1
SN54SC6T14-SEP	INVERT gate	SN74HC14ADBR	1
JANSR2N3700UB	NPN transistor	DNBT8105-7	1

22.1. Part-by-Part review

IPD380P06NM (P-channel MOSFET, D-PAK/TO-252-3)

V_DS = 60V, I_D = 35A, R_DS(on) = 38 mΩ, Ciss = 2500pF. Essentially the same electrical profile as BUP06CP038F-01 and the same D-PAK package. The C_GS = 2.5nF matches the design value used in all timing calculations.

OPA4325 (quad op-amp, TSSOP-14)

GBW 10MHz and slew rate 5V/µs are exact matches. Supply range 2.2 - 5.5V, RRIO, TSSOP-14 same package as OPA4H838-SEP, so the PCB footprint is identical. The only difference is offset voltage: 150µV max vs ±2.25µV on the space-grade part. This shifts trip thresholds very slightly but is negligible for verifying circuit logic and functionality.

TLV1704 (quad comparator, TSSOP-14)

TLV1704 is the commercial version of TLV1704-SEP, same part family, same 560 ns propagation delay, same open-drain output, same TSSOP-14 package. This is the closest match in the set.

SN74HC00 / SN54HC32 (NAND, OR gates)

Standard HC-family quad gates. Supply 2 - 6V, TSSOP-14 available. Same logic function as the SN54SC4T00-SEP and SN54SC4T32-SEP.

SN74LV6T17 (hex Schmitt buffer, TSSOP-14)

This replaces SN54SC6T17-SEP which drives both the blanking timer and retry timer RC circuits. Schmitt thresholds at 5V from the datasheet:

- V_T+: 1.10V (min) to 2.07V (max)
- V_T−: 0.495V (min) to 1.085V (max)

Compared to the design values for SN54SC6T17-SEP:

- V_T+: 1.121V to 2.118V
- V_T−: 0.581V to 1.029V

The ranges overlap almost entirely. Recalculating with LV6T17 thresholds:

	Design (SC6T17-SEP)	**Prototype (LV6T17)**
Retry delay (min)	0.56s	0.54s
Retry delay (max)	1.21s	1.18s
Blanking (min)	12.2ms	11.8ms
Blanking (max)	18.0ms	18.8ms

Timing is within ~5% of the final design, within acceptable tolerance for prototype verification.

SN74HC14 (hex Schmitt inverter, TSSOP-14)

This replaces SN54SC6T14-SEP used as the gate driver and for logic inversion of RETRY_PULSE and INIT_LATCH_STATE. None of these roles involve RC timing. They are pure logic inversions. Schmitt thresholds are irrelevant here. V_T+ at 4.5V is 1.55–3.13V (wider spread than SC6T14-SEP) but since the inputs are driven by CMOS logic outputs (close to rails), this makes no practical difference.

DNBT8105-7(NPN SOT-23)

Electrically fine for the discharge function: V_CEO = 80V, I_C = 1A, the minimum hFE should be ~100 well above the required hFE.

Reference

RC Schmitt trigger delay circuit: https://blog.mbedded.ninja/electronics/circuit-design/delays/

AN1332 Current Sensing Circuit Concepts and Fundamentals: 01332b.pdf

Space-Grade, 100-krad, Discrete, Three Op Amp Instrumentation Amplifier Circuit: snoaa71.pdf