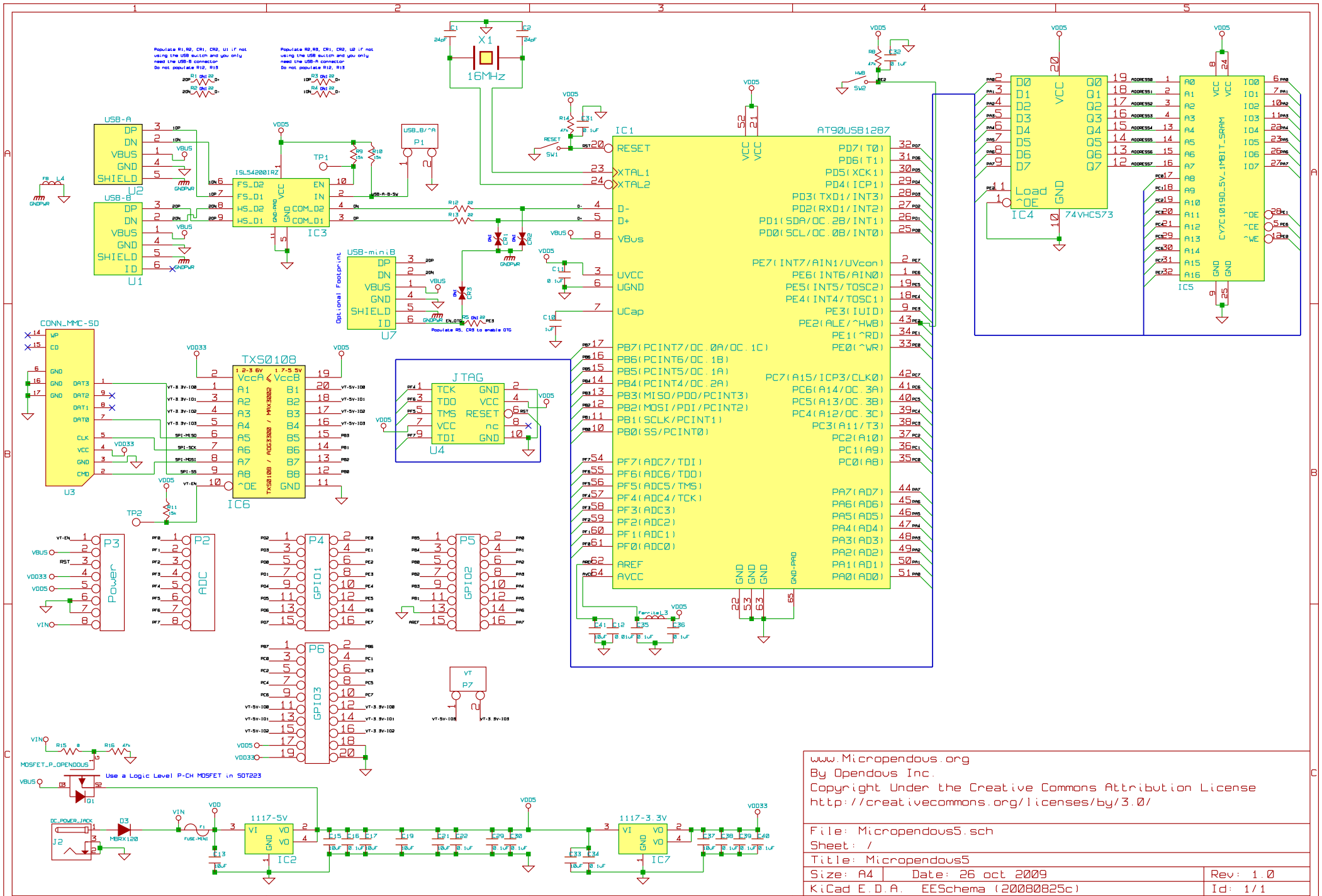

www.Micropendous.org
By Opendous Inc.
Copyright Under the Creative Commons Attribution License
http://creativecommons.org/licenses/by/3.0/

File: Micropendous5.sch	
Sheet: /	
Title: Micropendous5	
Size: A4 Date: 26 oct 2009	Rev: 1.0
KiCad E.D.A. EESchema (20080825c)	Id: 1/1