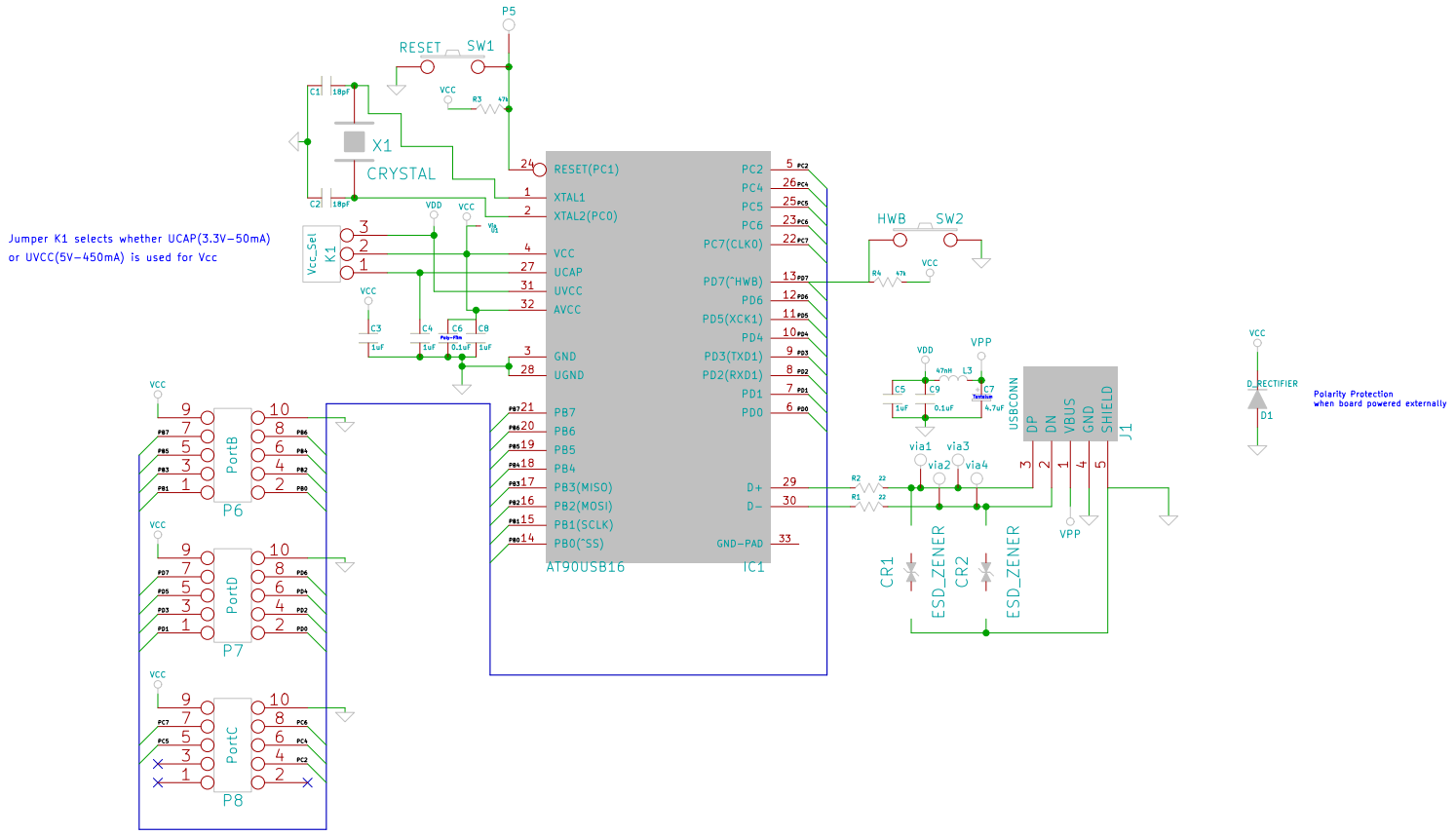

www.Micropendous.org
By Opendous Inc.
Copyright Under the Creative Commons Attribution License
http://creativecommons.org/licenses/by/3.0/

File: Micropendous1-Base.sch		
Sheet: /		
Title: Micropendous1-Base		
Size: A4	**Date: 30 aug 2010**	**Rev: 1.0**
KiCad E.D.A.		Id: 1/1