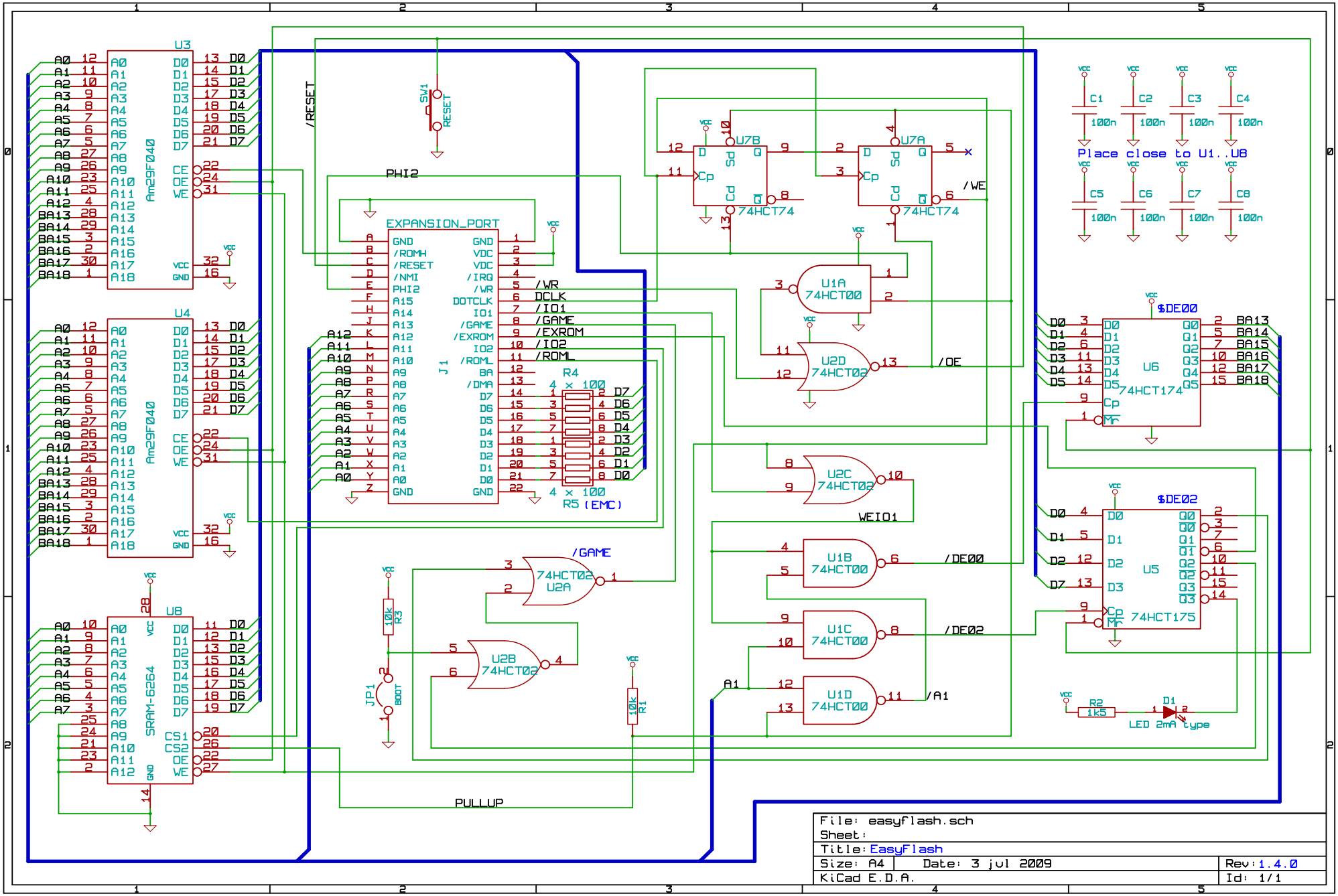

File: easyflash.sch		
Sheet:		
Title: EasyFlash		
Size: A4	Date: 3 jul 2009	Rev: 1.4.0
KiCad E.D.A.		Id: 1/1