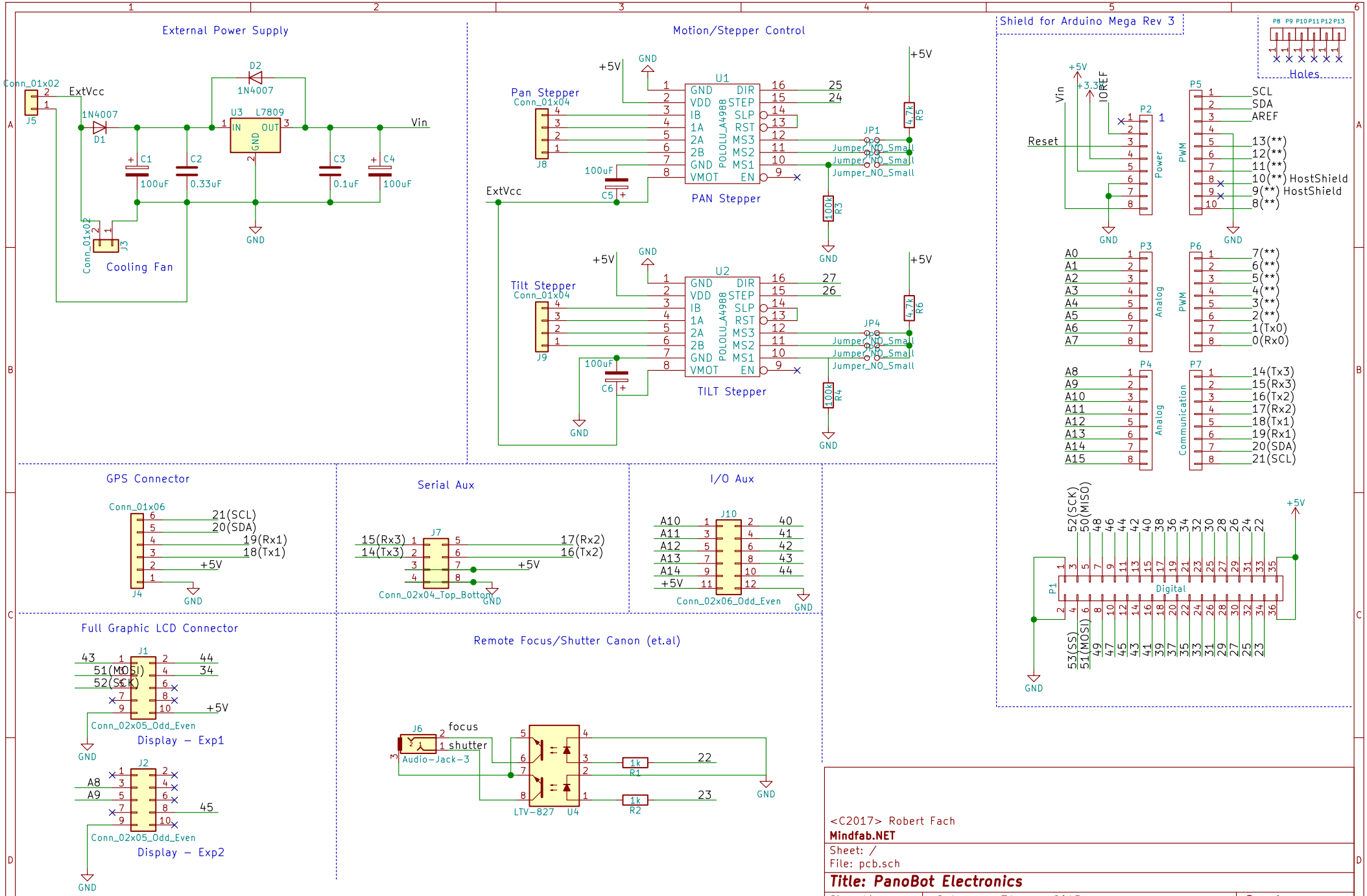

<C2017> Robert Fach

Mindfab.NET

Sheet: /

File: pcb.sch

Title: PanoBot Electronics

Size: A4	Date: mar. 31 mars 2015	**Rev: 1**
KiCad E.D.A. kicad 4.0.7-e2-637658ubuntu14.04.1		Id: 1/1