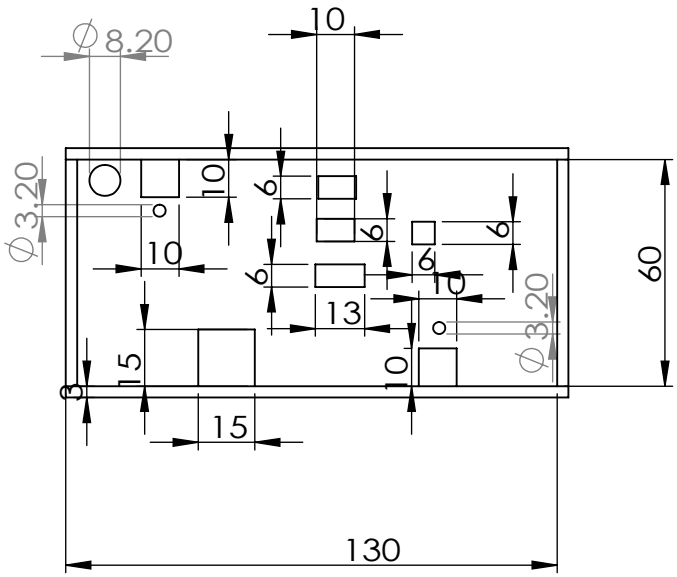
∅8.20
10
∅3.20
10
6
6
6
6
10
13
10
∅3.20
60
15
3
15
130

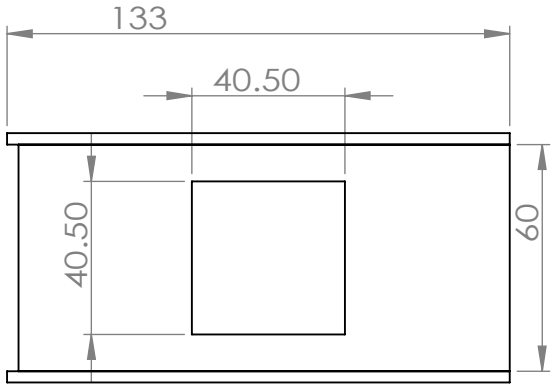
133
40.50
40.50
60