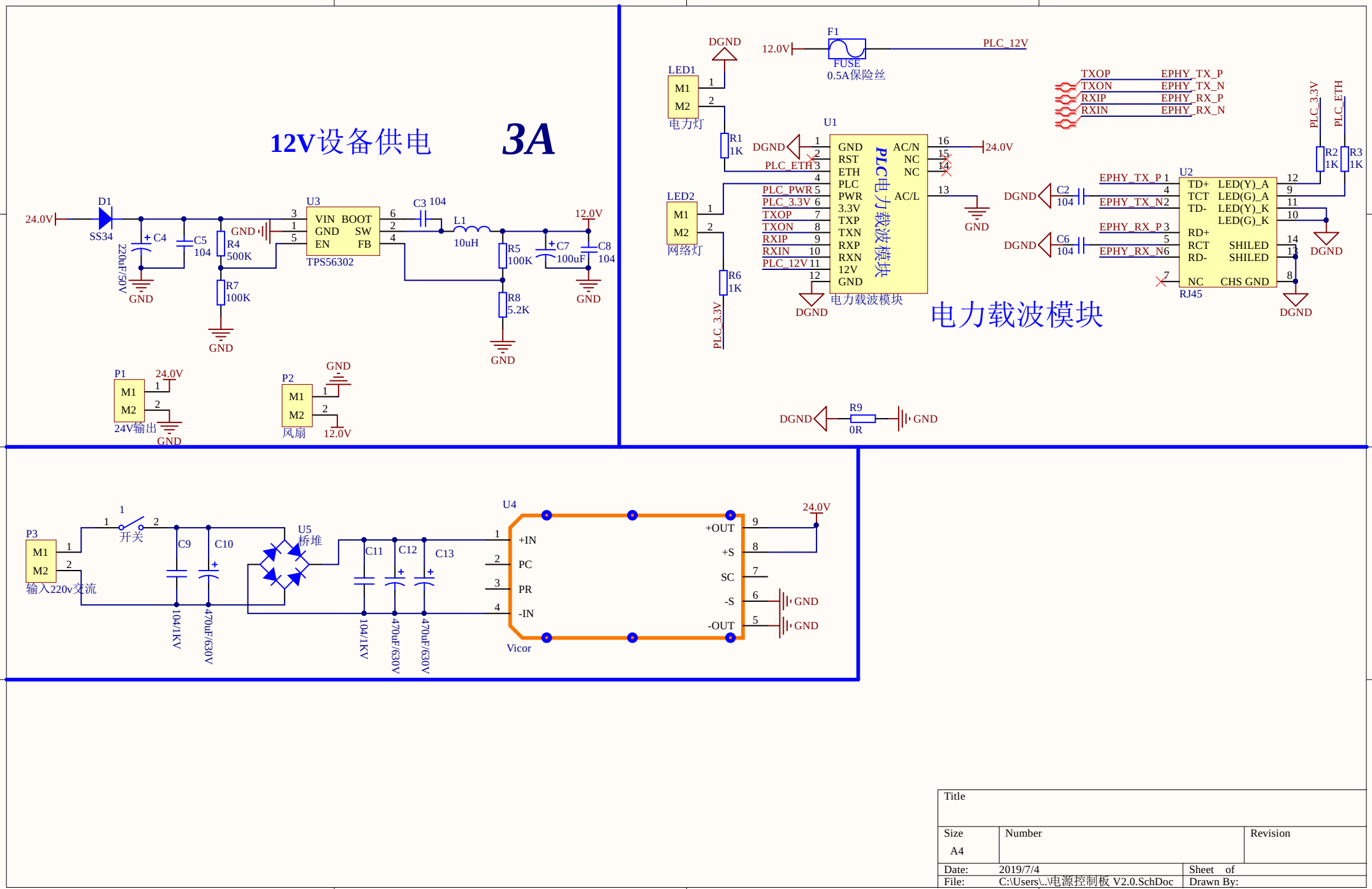


| Title | | |
|---|---|---|
| Size A4 | Number | Revision |
| Date: 2019/7/4 | | Sheet of |
| File: C:\Users\..\电源控制板 V2.0.SchDoc | | Drawn By: |