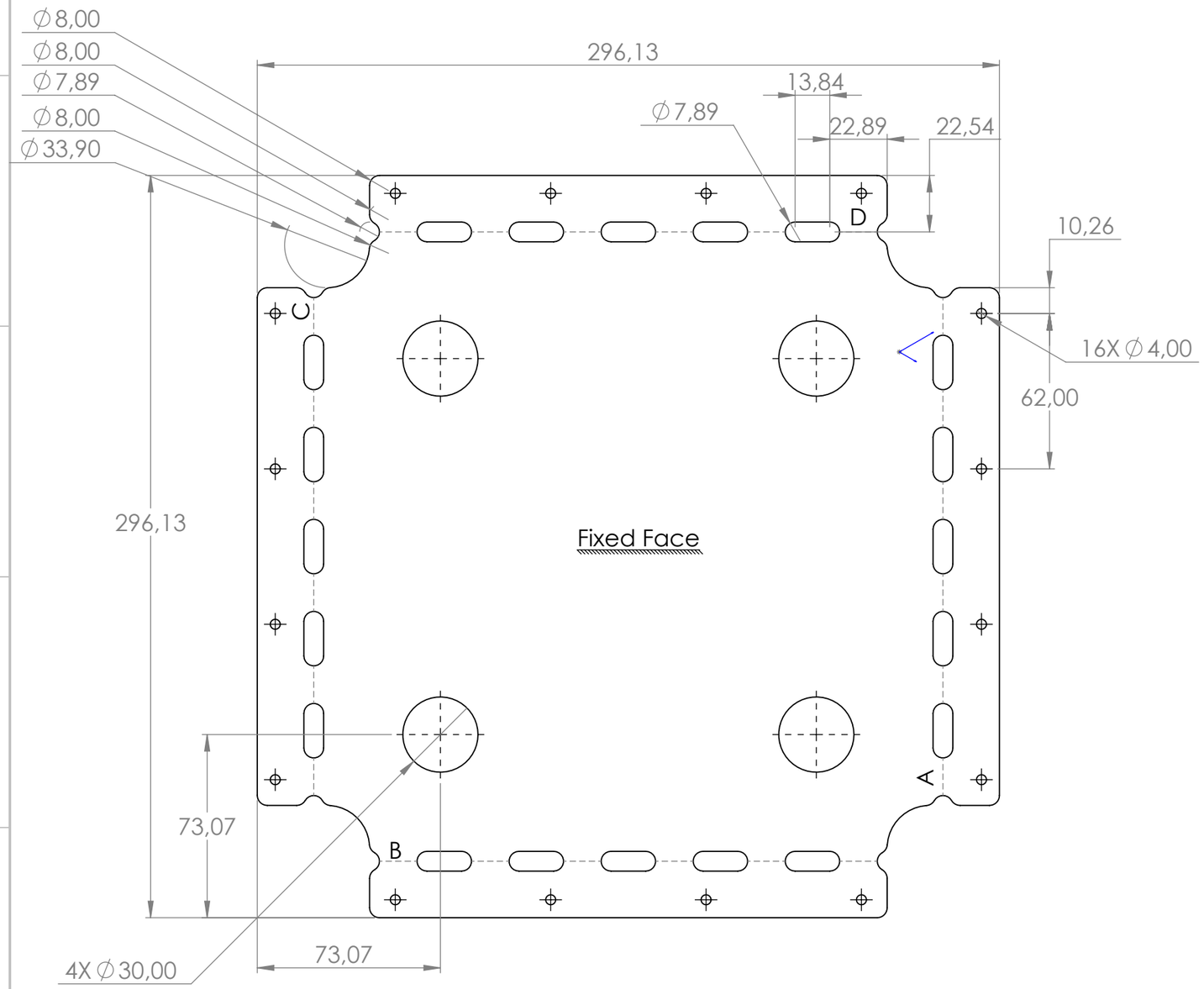

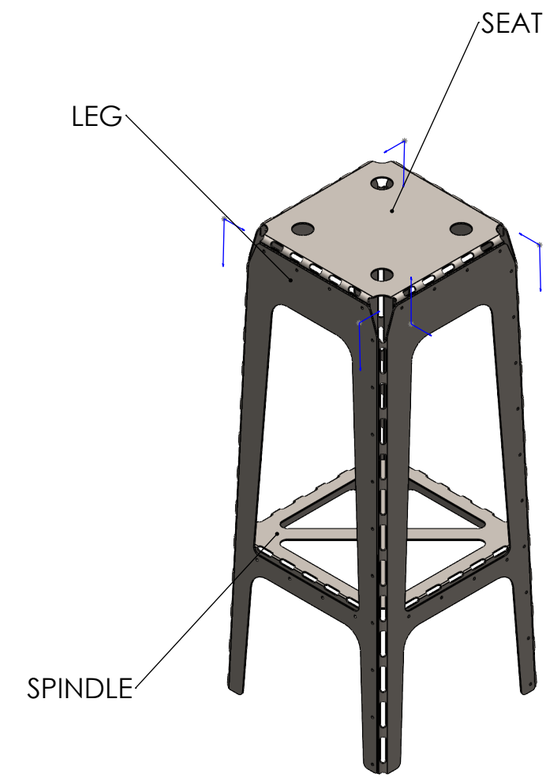

Tag	Direction	Angle	Inner Radius
A	DOWN	88.47°	6
B	DOWN	88.47°	6
C	DOWN	88.47°	6
D	DOWN	88.47°	6

PROPRIETARY AND CONFIDENTIAL

THE INFORMATION CONTAINED IN THIS DRAWING IS THE SOLE PROPERTY OF A. V. BAIRAMOV INC . ANY REPRODUCTION IN PART OR AS A WHOLE WITHOUT THE WRITTEN PERMISSION OF A. V. BAIRAMOV INC IS PROHIBITED.

UNLESS OTHERWISE SPECIFIED:
DIMENSIONS ARE IN MILLIMETERS
TOLERANCES:
ANGULAR: MACH ± 0° 30'
BEND ± 5°
TWO PLACE DECIMAL ±0.5
THREE PLACE DECIMAL ±0.15
SURFACE ROUGHNESS: 125

INTERPRET GEOMETRIC TOLERANCING PER: ASME Y14.15

MATERIAL
3003 ALUMINUM ALLOY per ASTM B209

FINISH
REMOVE ALL BURRS AND SHARP EDGES:
BREAK EDGES .005 - .015
DO NOT SCALE DRAWING

	NAME	DATE
DRAWN	A. V. Bairamov	01/Sep/2025
CHECKED	A. Bai. V.	01/Sep/2025
ENG APPR.	Bairamov A. V.	01/Sep/2025
MFG APPR	not completed	
Q.A.	V. Bairam. A.	01/Sep/2025

COMMENTS:

MATERIAL THICKNESS: 2MM

A. V. BAIRAMOV INC

TITLE:

SEAT

SIZE	DWG. NO.	REV
B	1	1

SCALE: 1:2 WEIGHT: SHEET 1 OF 1

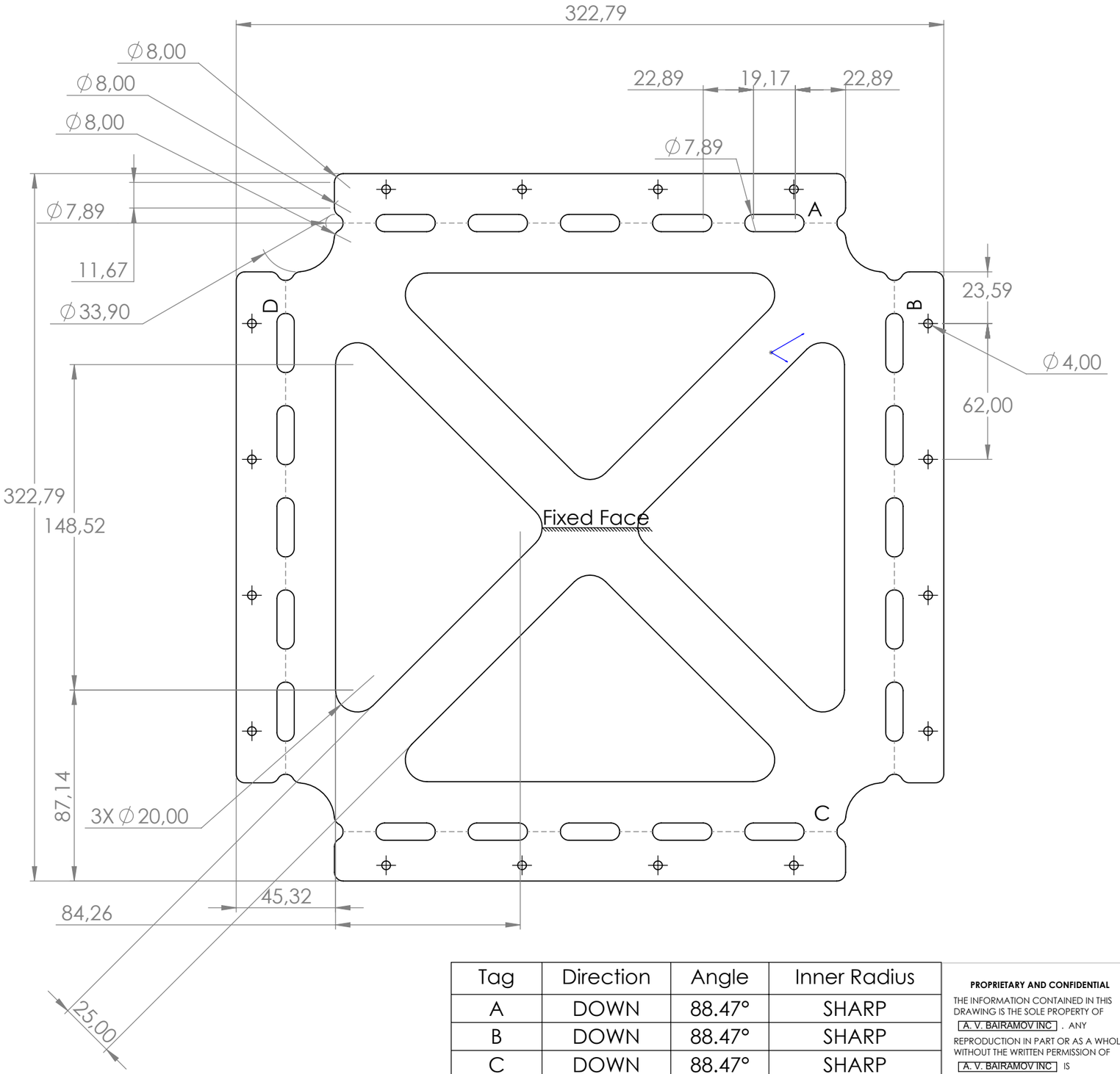

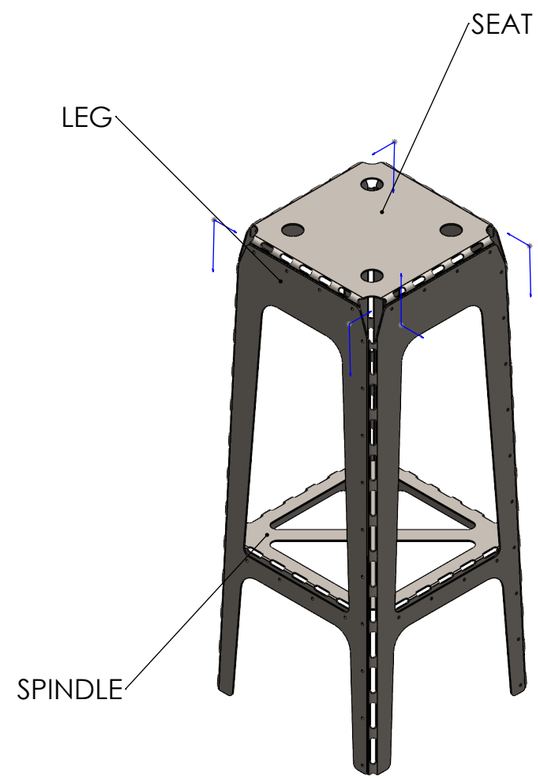

Tag	Direction	Angle	Inner Radius
A	DOWN	88.47°	SHARP
B	DOWN	88.47°	SHARP
C	DOWN	88.47°	SHARP
D	DOWN	88.47°	SHARP

PROPRIETARY AND CONFIDENTIAL

THE INFORMATION CONTAINED IN THIS DRAWING IS THE SOLE PROPERTY OF A. V. BAIRAMOV INC . ANY REPRODUCTION IN PART OR AS A WHOLE WITHOUT THE WRITTEN PERMISSION OF A. V. BAIRAMOV INC IS PROHIBITED.

UNLESS OTHERWISE SPECIFIED:
DIMENSIONS ARE IN MILLIMETERS
TOLERANCES:
ANGULAR: MACH ± 0° 30'
BEND ± 5°
TWO PLACE DECIMAL ±0.5
THREE PLACE DECIMAL ±0.15
SURFACE ROUGHNESS: 125
INTERPRET GEOMETRIC TOLERANCING PER: ASME Y14.15
MATERIAL
3003 ALUMINUM ALLOY per ASTM B209
FINISH
REMOVE ALL BURRS AND SHARP EDGES;
BREAK EDGES .005 - .015
DO NOT SCALE DRAWING

	NAME	DATE
DRAWN	A. V. Bairamov	01/Sep/2025
CHECKED	A. Bai. V.	01/Sep/2025
ENG APPR.	Bairamov A. V.	01/Sep/2025
MFG APPR	not completed	
Q.A.	V. Bairam. A.	01/Sep/2025

COMMENTS:
MATERIAL THICKNESS: 2MM

A. V. BAIRAMOV INC

TITLE:
SPINDLE

SIZE	DWG. NO.	REV
B	1	1

SCALE: 1:2 | WEIGHT: | SHEET 1 OF 1

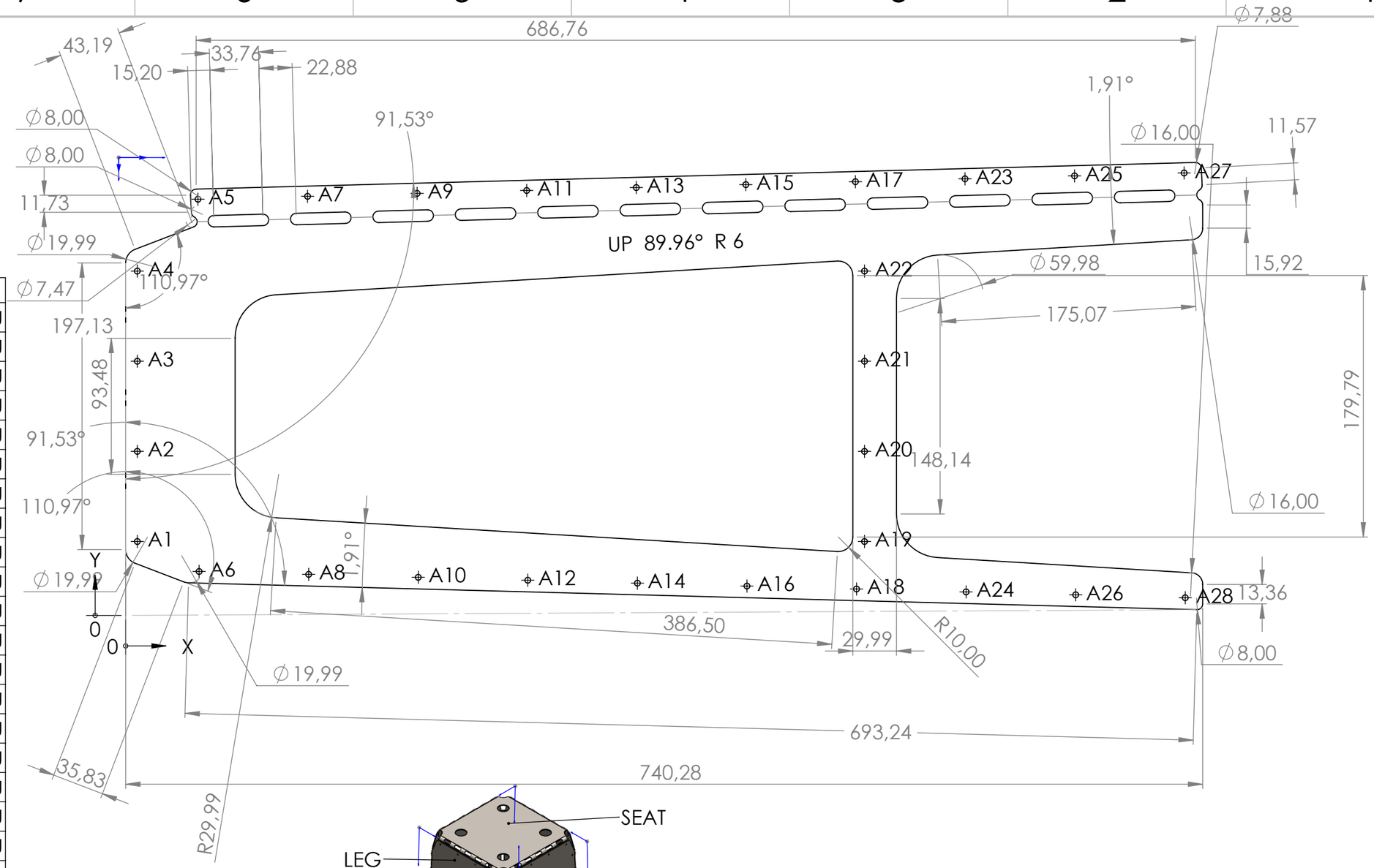

TAG	X LOC	Y LOC	SIZE
A1	8	50,85	∅4,00 THRU
A2	8	112,83	∅4,00 THRU
A3	8	174,82	∅4,00 THRU
A4	8	236,80	∅4,00 THRU
A5	49,70	286,20	∅4,00 THRU
A6	50,46	30,25	∅4,00 THRU
A7	125,01	288,21	∅4,00 THRU
A8	125,78	28,24	∅4,00 THRU
A9	200,32	290,21	∅4,00 THRU
A10	201,09	26,23	∅4,00 THRU
A11	275,64	292,22	∅4,00 THRU
A12	276,40	24,23	∅4,00 THRU
A13	350,95	294,23	∅4,00 THRU
A14	351,72	22,22	∅4,00 THRU
A15	426,26	296,24	∅4,00 THRU
A16	427,03	20,21	∅4,00 THRU
A17	501,58	298,24	∅4,00 THRU
A18	502,34	18,20	∅4,00 THRU
A19	507,82	50,85	∅4,00 THRU
A20	507,82	112,83	∅4,00 THRU
A21	507,82	174,82	∅4,00 THRU
A22	507,82	236,80	∅4,00 THRU
A23	576,89	300,25	∅4,00 THRU
A24	577,66	16,19	∅4,00 THRU
A25	652,20	302,26	∅4,00 THRU
A26	652,97	14,19	∅4,00 THRU
A27	727,52	304,27	∅4,00 THRU
A28	728,28	12,18	∅4,00 THRU

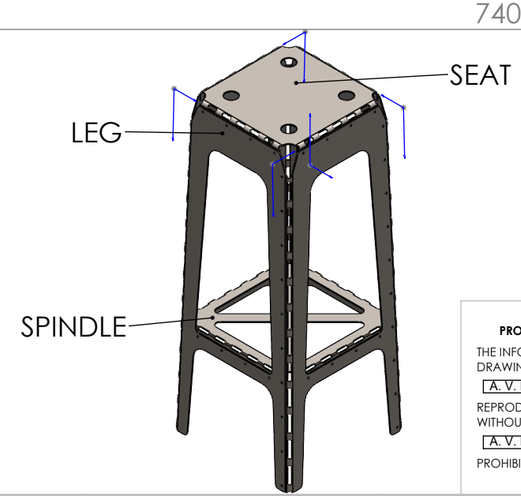

PROPRIETARY AND CONFIDENTIAL

THE INFORMATION CONTAINED IN THIS DRAWING IS THE SOLE PROPERTY OF A. V. BAIRAMOV INC . ANY REPRODUCTION IN PART OR AS A WHOLE WITHOUT THE WRITTEN PERMISSION OF A. V. BAIRAMOV INC IS PROHIBITED.

UNLESS OTHERWISE SPECIFIED:
DIMENSIONS ARE IN MILLIMETERS
TOLERANCES:
ANGULAR: MACH ± 0° 30'
BEND ± 5°
TWO PLACE DECIMAL ±0.5
THREE PLACE DECIMAL ±0.15
SURFACE ROUGHNESS: 125

INTERPRET GEOMETRIC TOLERANCING PER: ASME Y14.15

MATERIAL
3003 ALUMINUM ALLOY per ASTM B209

FINISH
REMOVE ALL BURRS AND SHARP EDGES;
BREAK EDGES .005 - .015
DO NOT SCALE DRAWING

	NAME	DATE
DRAWN	A. V. Bairamov	01/Sep/2025
CHECKED	A. Bai. V.	01/Sep/2025
ENG APPR.	Bairamov A. V.	01/Sep/2025
MFG APPR	not completed	
Q.A.	V. Bairam. A.	01/Sep/2025

COMMENTS:

MATERIAL THICKNESS: 2MM

A. V. BAIRAMOV INC

TITLE:

LEG

SIZE	DWG. NO.	REV
B	1	1

SCALE: 1:3 WEIGHT: SHEET 1 OF 1