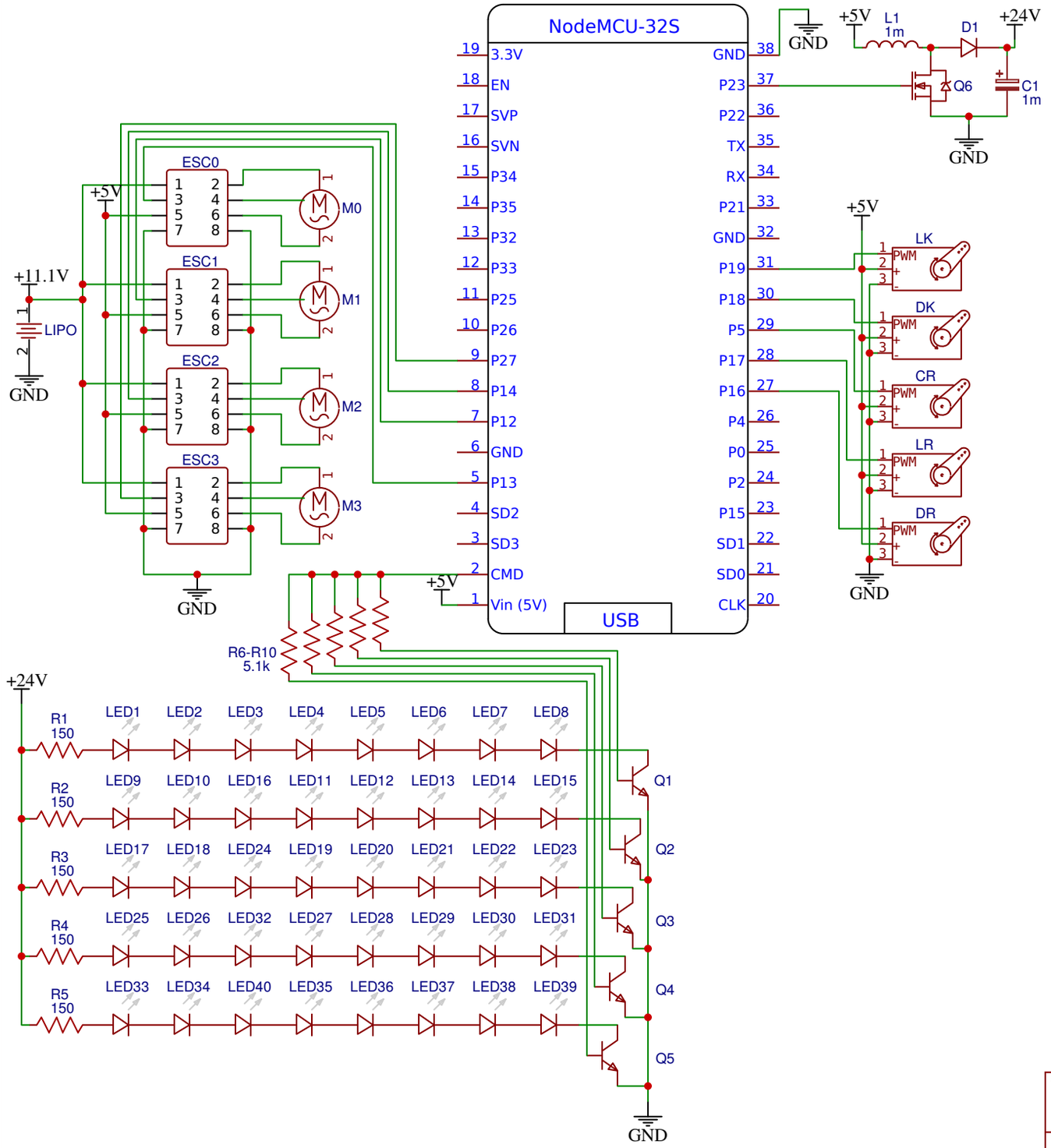

TITLE: ZOTplane		REV: 1.0
	Company: Bamzar	Sheet: 1/1
	Date: 2019-05-20 Drawn By: Hasak	