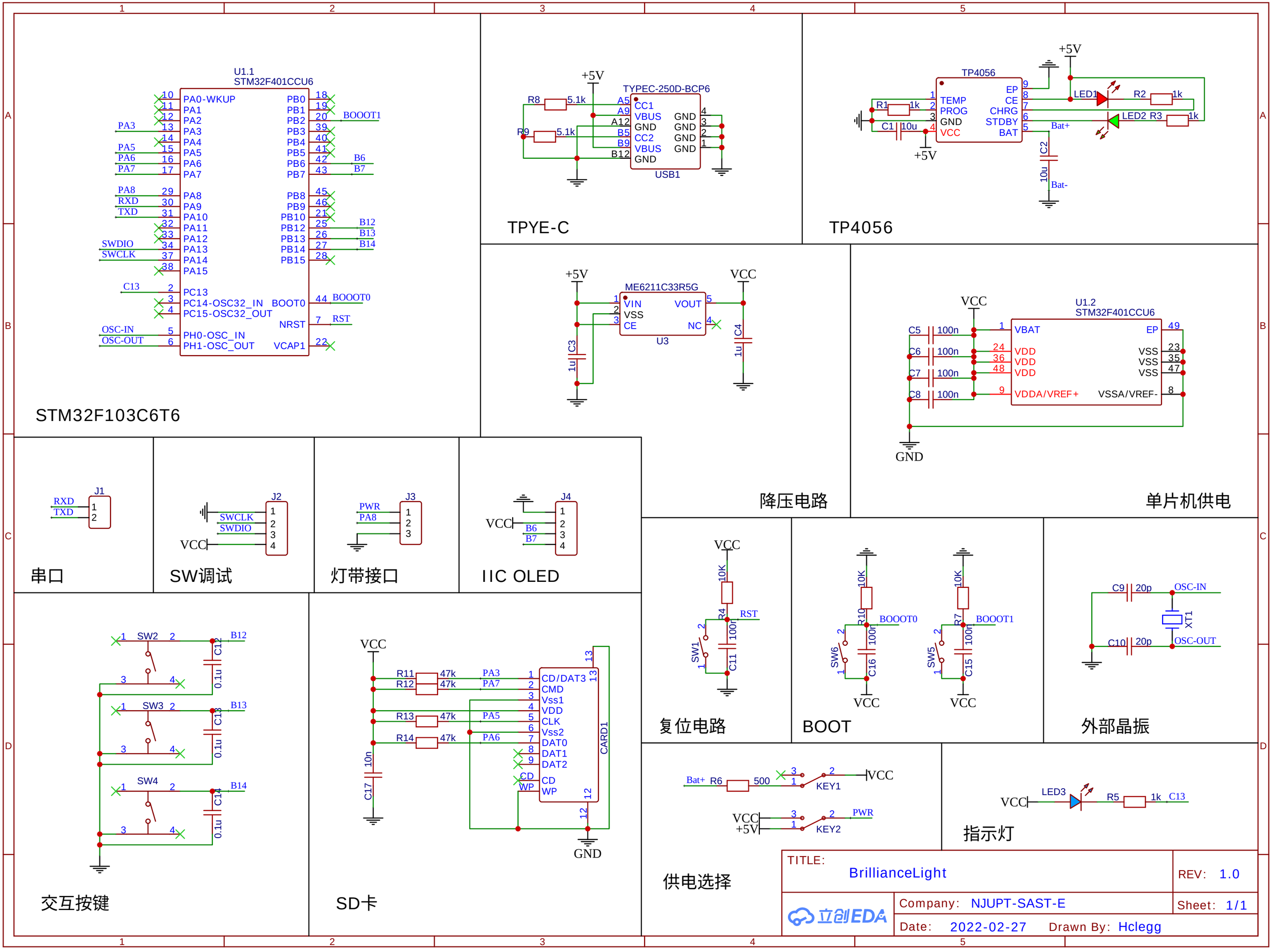
U1.1
STM32F401CCU6
PA0-WKUP
PA1
PA2
PA3
PA4
PA5
PA6
PA7
PA8
PA9
PA10
PA11
PA12
PA13
PA14
PA15
PC13
PC14-OSC32_IN
PC15-OSC32_OUT
PH0-OSC_IN
PH1-OSC_OUT
PB0
PB1
PB2
PB3
PB4
PB5
PB6
PB7
PB8
PB9
PB10
PB12
PB13
PB14
PB15
BOOT0
NRST
VCAP1
BOOOT1
BOOOT0
RST
B6
B7
B12
B13
B14
RXD
TXD
SWDIO
SWCLK
C13
OSC-IN
OSC-OUT
STM32F103C6T6
+5V
R8
5.1k
R9
5.1k
TYPEC-250D-BCP6
CC1
VBUS
GND
CC2
VBUS
GND
A5
A9
A12
B5
B9
B12
GND
USB1
TPYE-C
TP4056
TEMP
PROG
GND
VCC
EP
CE
CHRG
STDBY
BAT
R1
1k
C1
10u
LED1
LED2
R2
R3
Bat+
Bat-
C2
10u
ME6211C33R5G
VIN
VSS
CE
VOUT
NC
U3
C3
1u
C4
1u
降压电路
U1.2
STM32F401CCU6
VBAT
VDD
VDDA/VREF+
EP
VSS
VSSA/VREF-
C5
C6
C7
C8
100n
GND
单片机供电
J1
RXD
TXD
串口
J2
SWCLK
SWDIO
SW调试
J3
PWR
PA8
灯带接口
J4
B6
B7
IIC OLED
R4
100n
C11
10K
RST
SW1
复位电路
R10
C16
BOOOT0
SW6
R7
C15
BOOOT1
SW5
BOOT
C9
20p
OSC-IN
C10
20p
OSC-OUT
XT1
外部晶振
SW2
SW3
SW4
C12
C13
C14
0.1u
交互按键
R11
R12
R13
R14
47k
PA3
PA7
PA5
PA6
CD/DAT3
CMD
Vss1
VDD
CLK
Vss2
DAT0
DAT1
DAT2
CD
WP
CARD1
C17
10n
SD卡
Bat+
R6
500
KEY1
KEY2
PWR
供电选择
LED3
R5
1k
C13
指示灯
TITLE:
BrillianceLight
REV: 1.0
Company: NJUPT-SAST-E
Sheet: 1/1
Date: 2022-02-27
Drawn By: Hclegg
立创EDA