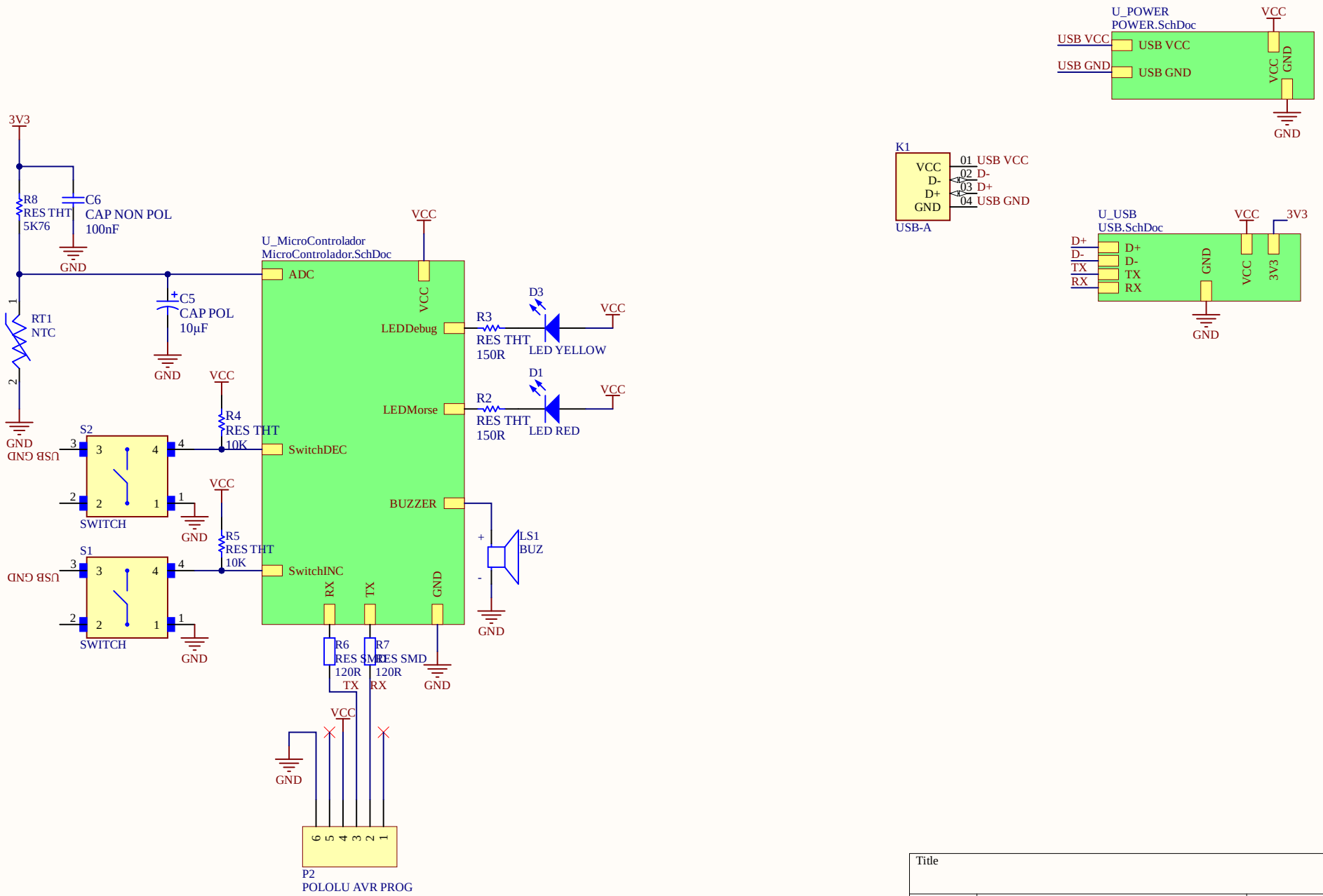

Title		
Size A4	Number	Revision
Date: 3/09/2026		Sheet of
File: C:\Users\..\Main.SchDoc		Drawn By:

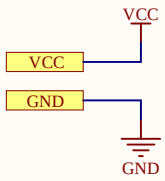

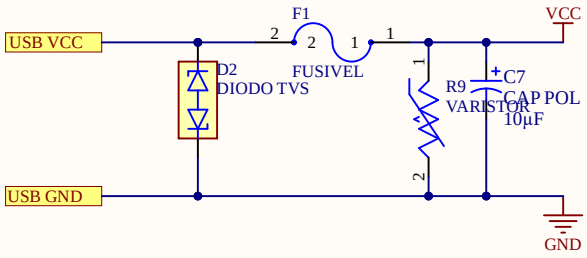

Title		
Size A4	Number	Revision
Date: 3/09/2026		Sheet of
File: C:\Users\..\POWER.SchDoc		Drawn By:

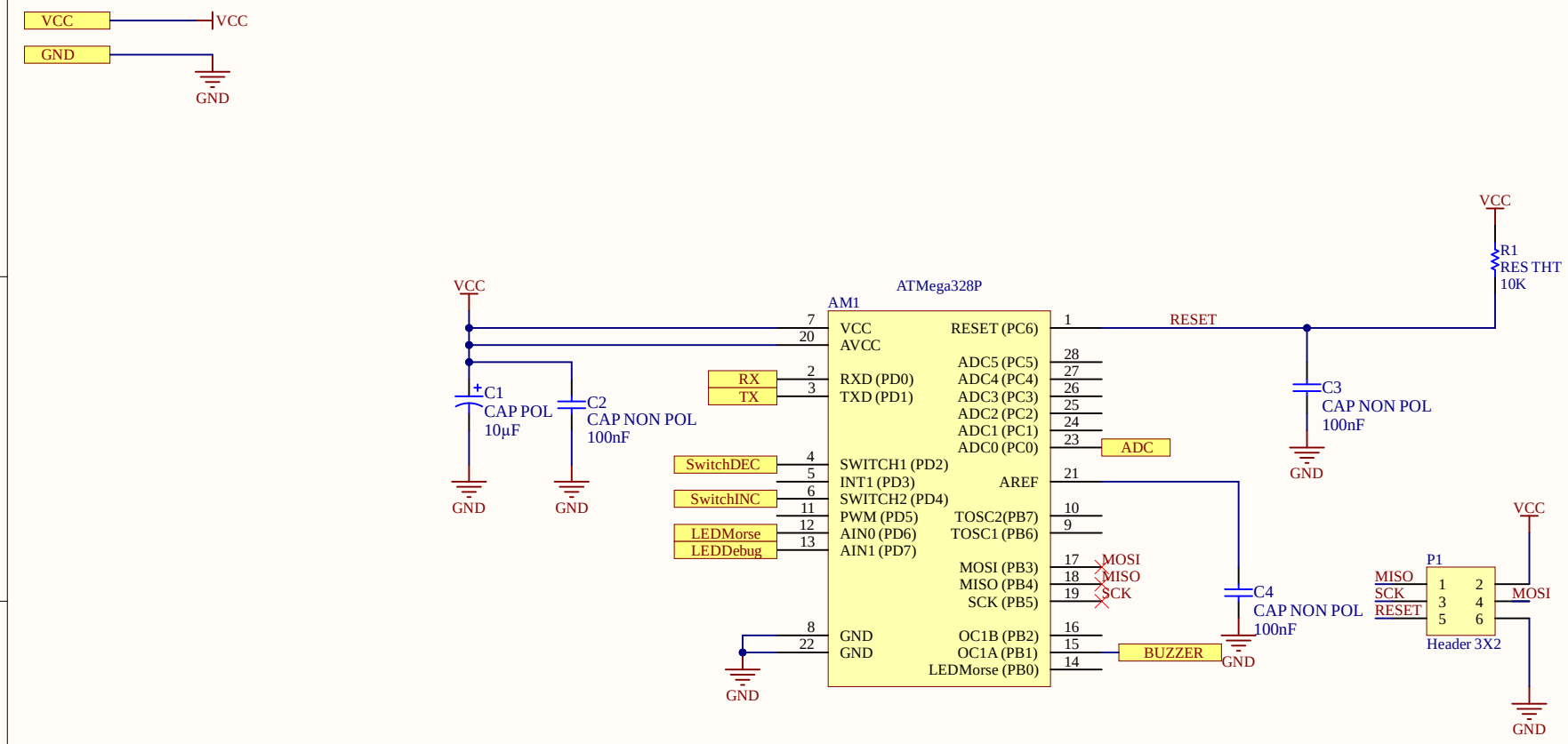

Title		
Size A4	Number	Revision
Date: 3/09/2026		Sheet of
File: C:\Users\..\MicroControlador.SchDoc		Drawn By:

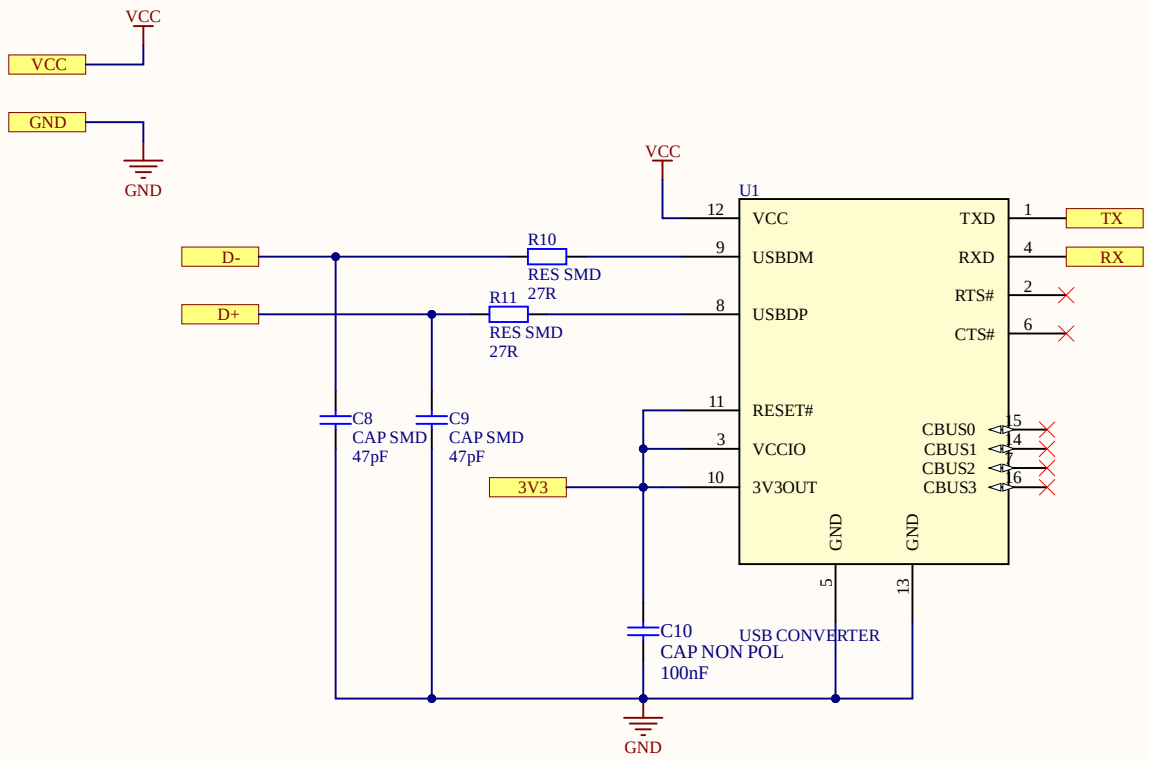

Title		
Size A4	Number	Revision
Date: 3/09/2026		Sheet of
File: C:\Users\..\USB.SchDoc		Drawn By:

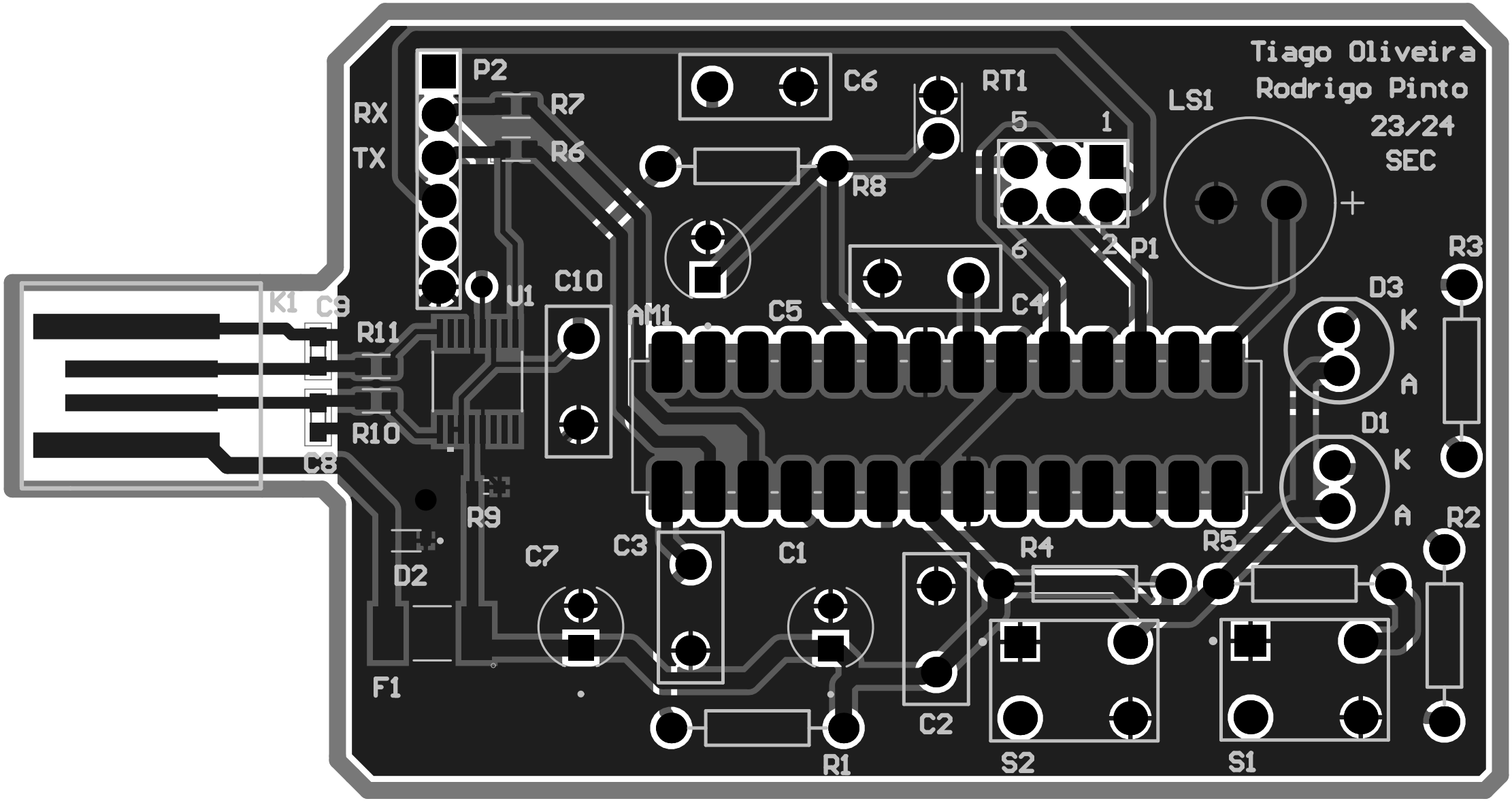
Tiago Oliveira
Rodrigo Pinto
23/24
SEC
P2
RX
TX
R7
R6
C6
RT1
R8
5
1
6
2
P1
LS1
+
R3
D3
K
A
D1
K
A
R2
K1
C9
R11
R10
C8
U1
C10
AM1
C5
C4
R9
D2
C7
C3
C1
R4
R5
C2
F1
R1
S2
S1