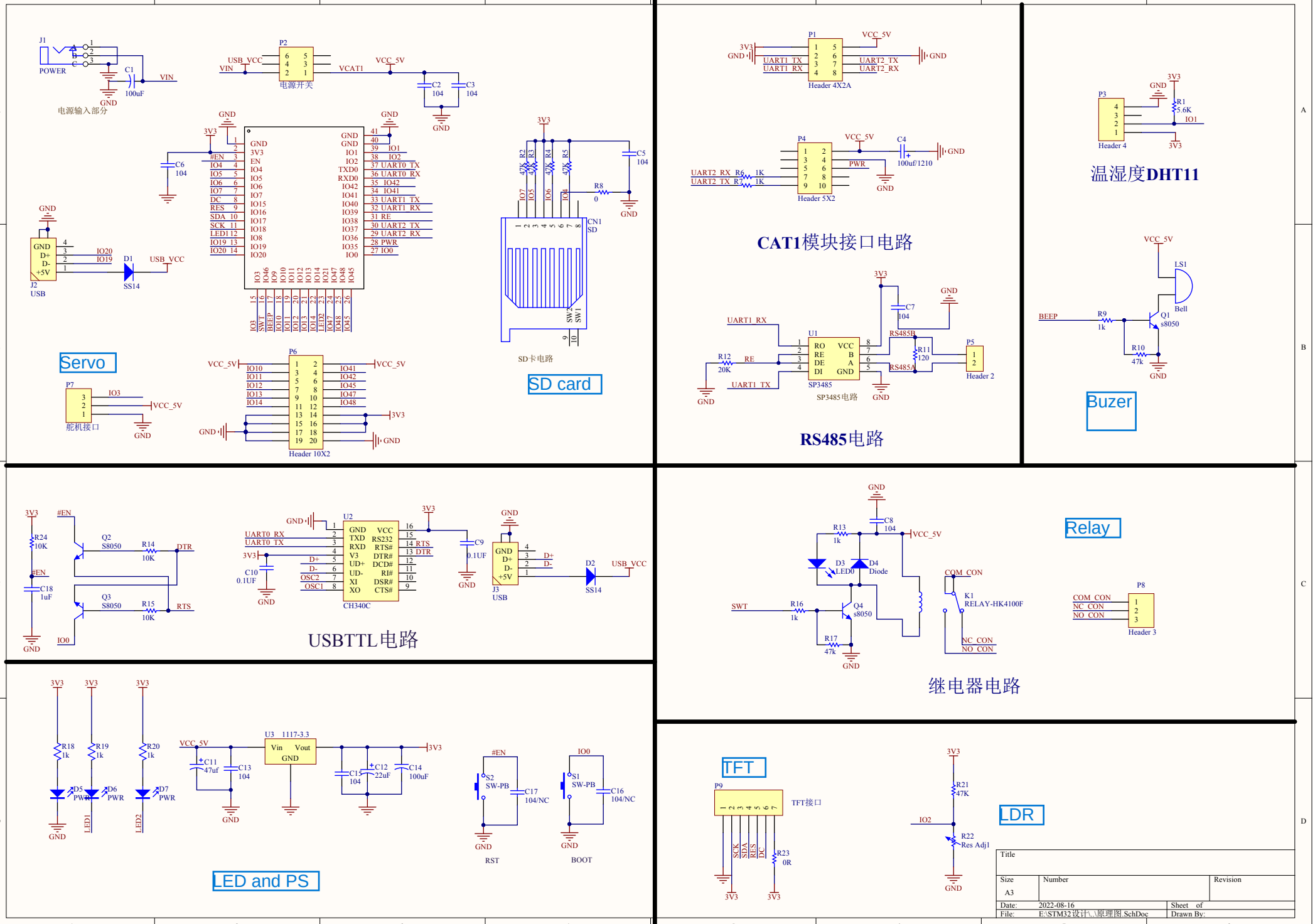
J1
POWER
C1
100uF
VIN
GND
电源输入部分
P2
USB_VCC
VIN
电源开关
VCAT1
VCC_5V
C2
104
C3
104
3V3
C6
104
#EN
IO4
IO5
IO6
IO7
DC
RES
SDA
SCK
LED1
IO19
IO20
GND
3V3
EN
IO4
IO5
IO6
IO7
IO15
IO16
IO17
IO18
IO8
IO19
IO20
GND
GND
IO1
IO2
TXD0
RXD0
IO42
IO41
IO40
IO39
IO38
IO37
IO36
IO35
IO0
37 UART0_TX
36 UART0_RX
35 IO42
34 IO41
33 UART1_TX
32 UART1_RX
31 RE
30 UART2_TX
29 UART2_RX
28 PWR
27 IO0
IO3
IO46
IO9
IO10
IO11
IO12
IO13
IO14
IO21
IO47
IO48
IO45
IO3
SWT
BEEP
IO10
IO11
IO12
IO13
IO14
LED2
IO47
IO48
IO45
J2
USB
GND
D+
D-
+5V
IO20
IO19
D1
SS14
USB_VCC
Servo
P7
IO3
VCC_5V
GND
舵机接口
P6
VCC_5V
IO10
IO11
IO12
IO13
IO14
IO41
IO42
IO45
IO47
IO48
3V3
GND
Header 10X2
R2
R3
R4
R5
4K7
IO7
IO5
IO6
IO4
R8
0
C5
104
CN1
SD
SW 2
SW 1
SD卡电路
SD card
P1
VCC_5V
3V3
GND
UART1_TX
UART1_RX
UART2_TX
UART2_RX
Header 4X2A
P4
VCC_5V
C4
100uf/1210
PWR
UART2_RX R6 1K
UART2_TX R7 1K
Header 5X2
CAT1模块接口电路
P3
3V3
GND
R1
5.6K
IO1
Header 4
温湿度DHT11
VCC_5V
LS1
Bell
BEEP
R9
1k
Q1
s8050
R10
47k
GND
Buzer
3V3
C7
104
GND
UART1_RX
U1
RO
RE
DE
DI
VCC
B
A
GND
R12
20K
RE
UART1_TX
SP3485
RS485B
RS485A
R11
120
P5
Header 2
SP3485电路
RS485电路
3V3
#EN
R24
10K
Q2
S8050
R14
10K
DTR
C18
1uF
Q3
S8050
R15
10K
RTS
IO0
GND
U2
UART0_RX
UART0_TX
3V3
C10
0.1UF
D+
D-
OSC2
OSC1
GND
TXD
RXD
V3
UD+
UD-
XI
XO
RS232
RTS#
DTR#
DCD#
RI#
DSR#
CTS#
14 RTS
13 DTR
CH340C
C9
0.1UF
J3
USB
D2
SS14
USB_VCC
USBTTL电路
GND
C8
104
VCC_5V
R13
1k
D3
LED0
D4
Diode
SWT
R16
1k
Q4
s8050
R17
47k
COM_CON
K1
RELAY-HK4100F
NC_CON
NO_CON
Relay
P8
COM_CON
NC_CON
NO_CON
Header 3
继电器电路
3V3
R18
1k
R19
1k
R20
1k
D5
PWR
D6
PWR
D7
PWR
LED1
LED2
GND
VCC_5V
C11
47uf
C13
104
U3 1117-3.3
Vin
Vout
GND
C15
104
C12
22uF
C14
100uF
3V3
#EN
S2
SW-PB
C17
104/NC
RST
IO0
S1
SW-PB
C16
104/NC
BOOT
LED and PS
TFT
P9
TFT接口
SCK
SDA
RES
DC
R23
0R
3V3
3V3
3V3
R21
47K
IO2
R22
Res Adj1
LDR
Title
Size
A3
Number
Revision
Date: 2022-08-16
Sheet of
File: E:\STM32设计\..\原理图.SchDoc
Drawn By: