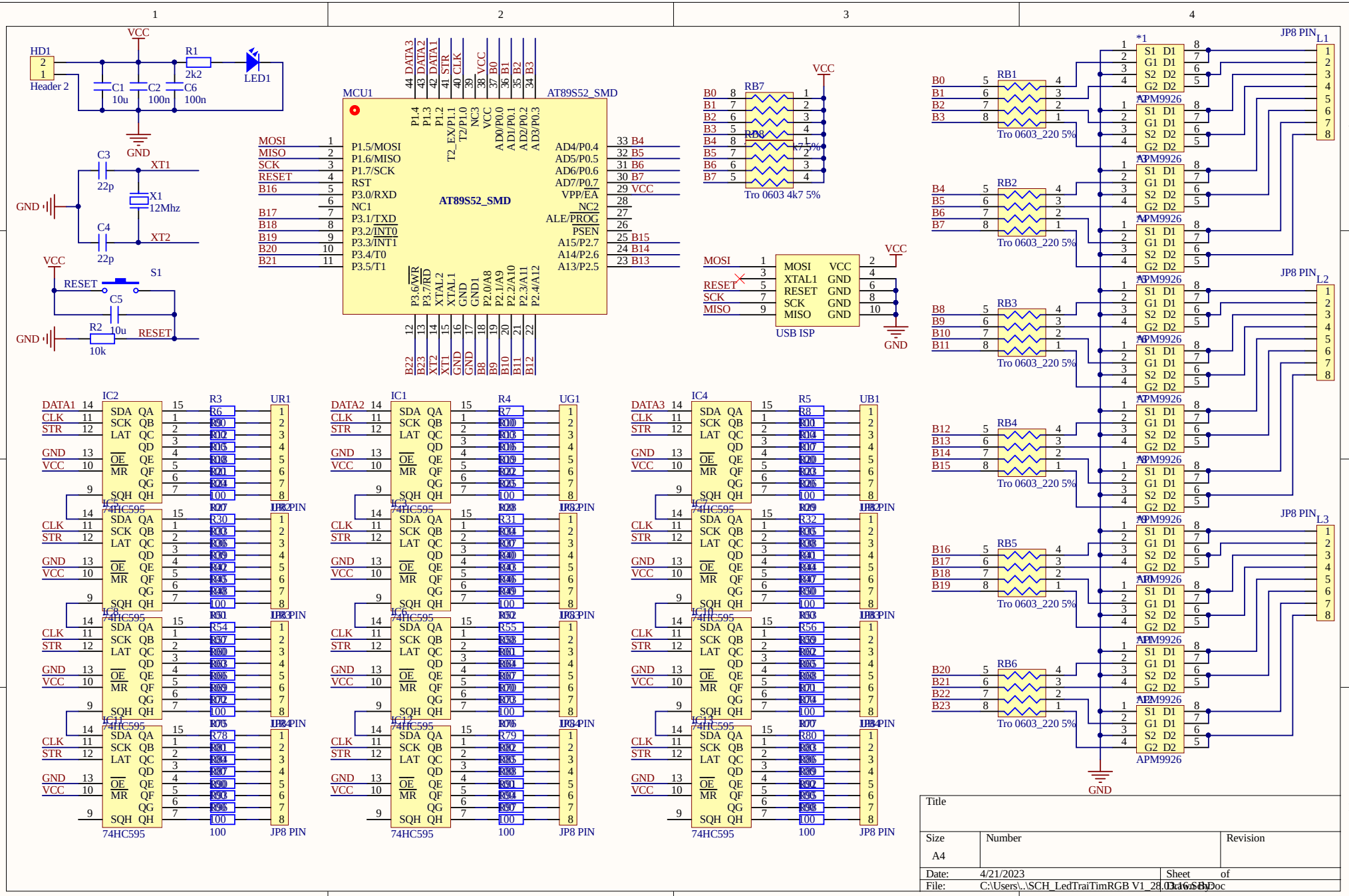

Title		
Size A4	Number	Revision
Date: 4/21/2023	Sheet of	
File: C:\Users\..\SCH_LedTraiTimRGB V1_28.03.16.SchDoc	Drawn By:	