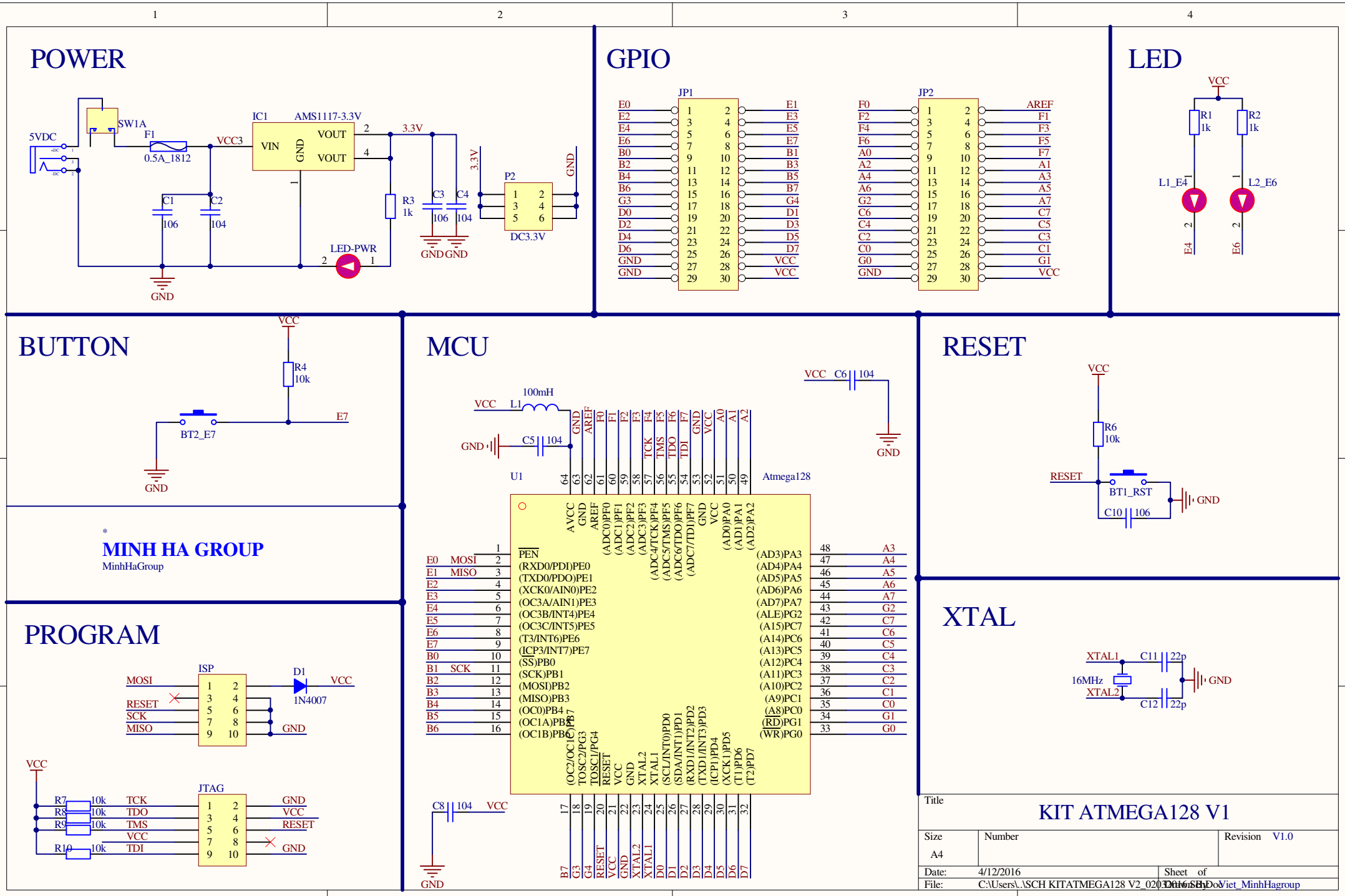
POWER
5VDC
SW1A
F1
0.5A_1812
VCC3
IC1
AMS1117-3.3V
VIN
GND
VOUT
VOUT
3.3V
C1
106
C2
104
R3
1k
C3
106
C4
104
P2
DC3.3V
LED-PWR
GND
GPIO
JP1
JP2
LED
VCC
R1
1k
R2
1k
L1_E4
L2_E6
BUTTON
R4
10k
BT2_E7
E7
MINH HA GROUP
MinhHaGroup
MCU
100mH
L1
C5
104
C6
104
U1
Atmega128
C8
104
RESET
R6
10k
BT1_RST
C10
106
XTAL
XTAL1
XTAL2
16MHz
C11
22p
C12
22p
PROGRAM
ISP
MOSI
RESET
SCK
MISO
D1
1N4007
JTAG
R7
10k
R8
10k
R9
10k
R10
10k
TCK
TDO
TMS
TDI
Title
KIT ATMEGA128 V1
Size
A4
Number
Revision
V1.0
Date:
4/12/2016
Sheet of
File:
C:\Users\..\SCH KITATMEGA128 V2_020316.SchDoc
Drawn By:
Viet_MinhHagroup