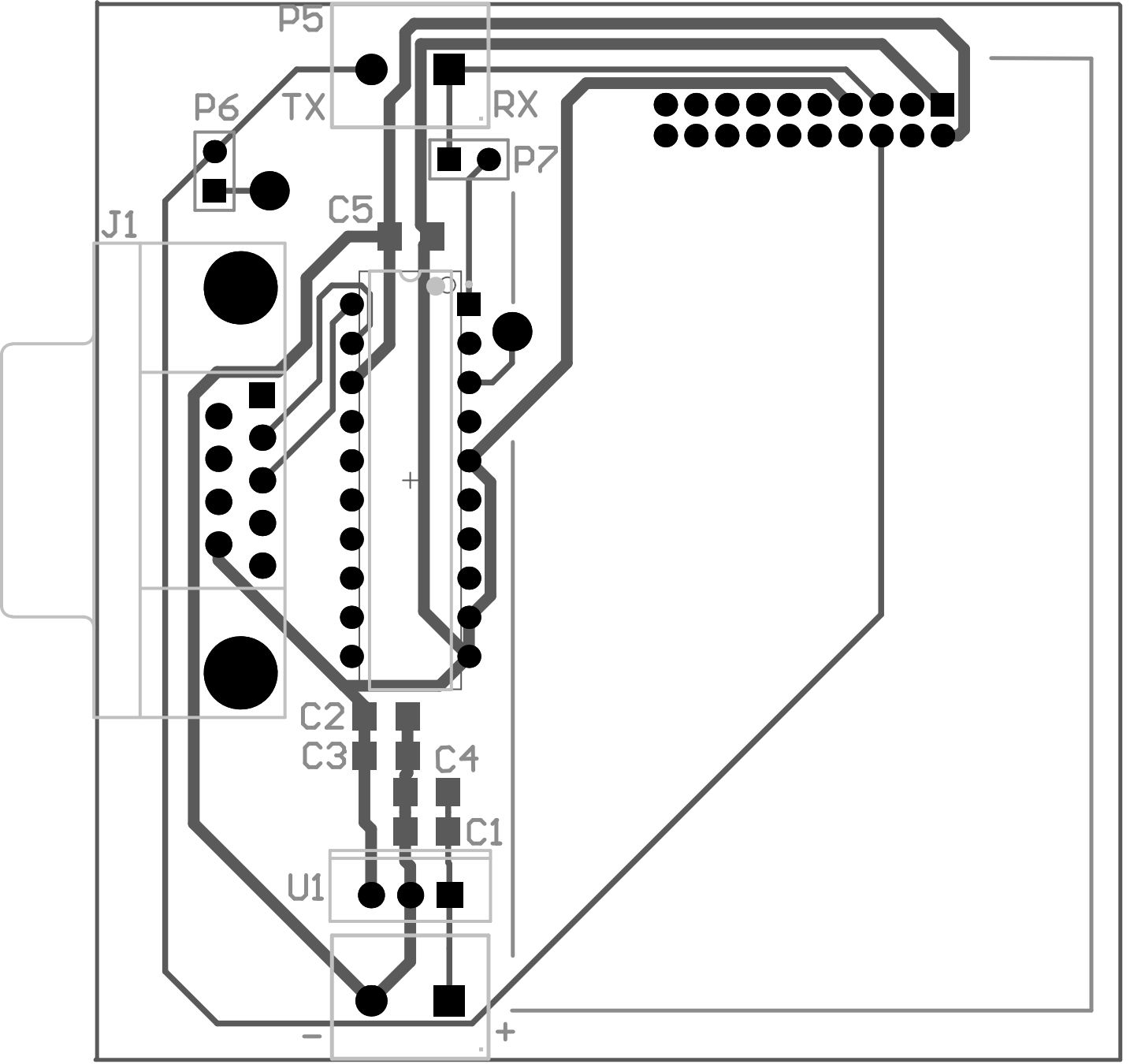
P5
P6
TX
RX
P7
J1
C5
C2
C3
C4
C1
U1
−
+

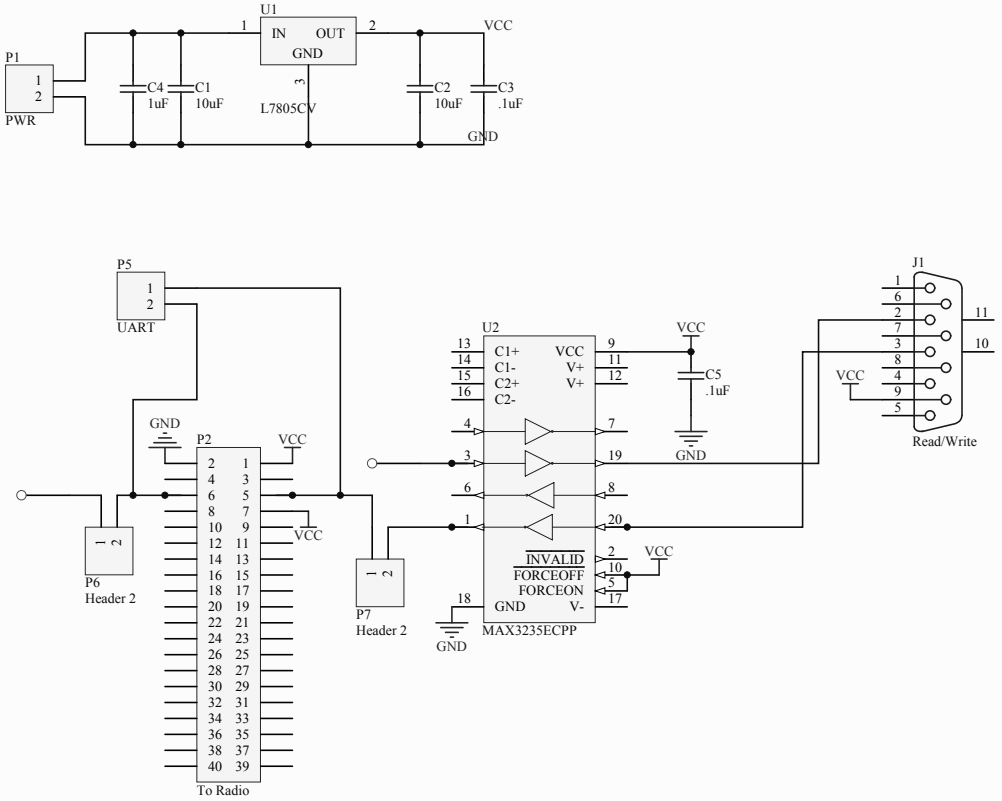

Title		
Size A4	Number	Revision
Date: 11/13/2010		Sheet of
File: C:\bwmairs\..\schematic.SchDoc		Drawn By: