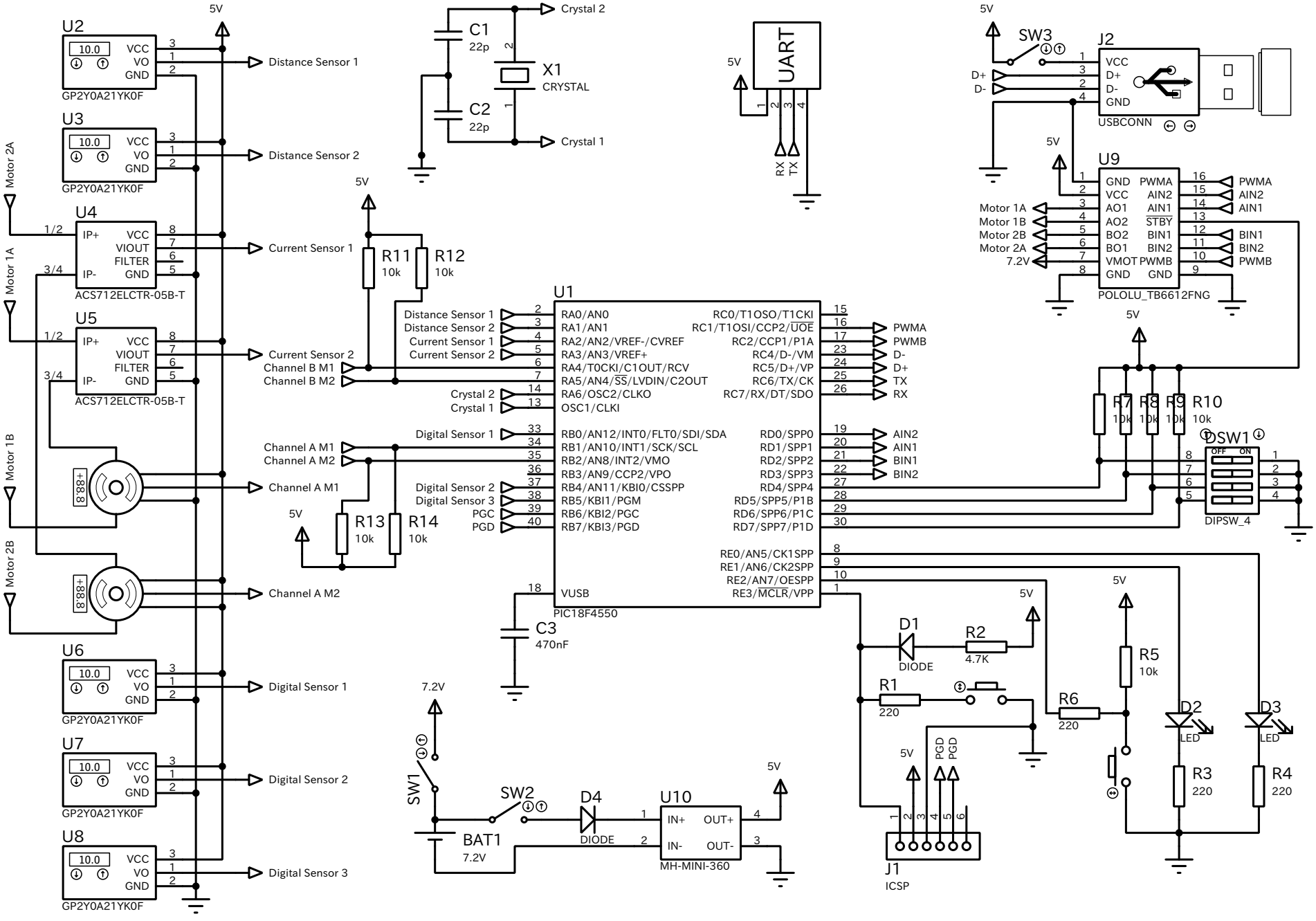
U2
GP2Y0A21YK0F
U3
GP2Y0A21YK0F
U4
ACS712ELCTR-05B-T
U5
ACS712ELCTR-05B-T
U6
GP2Y0A21YK0F
U7
GP2Y0A21YK0F
U8
GP2Y0A21YK0F
Distance Sensor 1
Distance Sensor 2
Current Sensor 1
Current Sensor 2
Channel A M1
Channel A M2
Digital Sensor 1
Digital Sensor 2
Digital Sensor 3
Motor 2A
Motor 1A
Motor 1B
Motor 2B
C1
22p
C2
22p
X1
CRYSTAL
Crystal 2
Crystal 1
UART
RX
TX
R11
10k
R12
10k
R13
10k
R14
10k
U1
PIC18F4550
Channel B M1
Channel B M2
Digital Sensor 1
Digital Sensor 2
Digital Sensor 3
PGC
PGD
PWMA
PWMB
D-
D+
TX
RX
AIN2
AIN1
BIN1
BIN2
C3
470nF
SW3
J2
USBCONN
D+
D-
U9
POLOLU_TB6612FNG
Motor 1A
Motor 1B
Motor 2B
Motor 2A
7.2V
R7
10k
R8
10k
R9
10k
R10
10k
DSW1
DIPSW_4
D1
DIODE
R2
4.7K
R1
220
R6
220
R5
10k
D2
LED
D3
LED
R3
220
R4
220
J1
ICSP
SW1
BAT1
7.2V
SW2
D4
DIODE
U10
MH-MINI-360
IN+
OUT+
IN-
OUT-