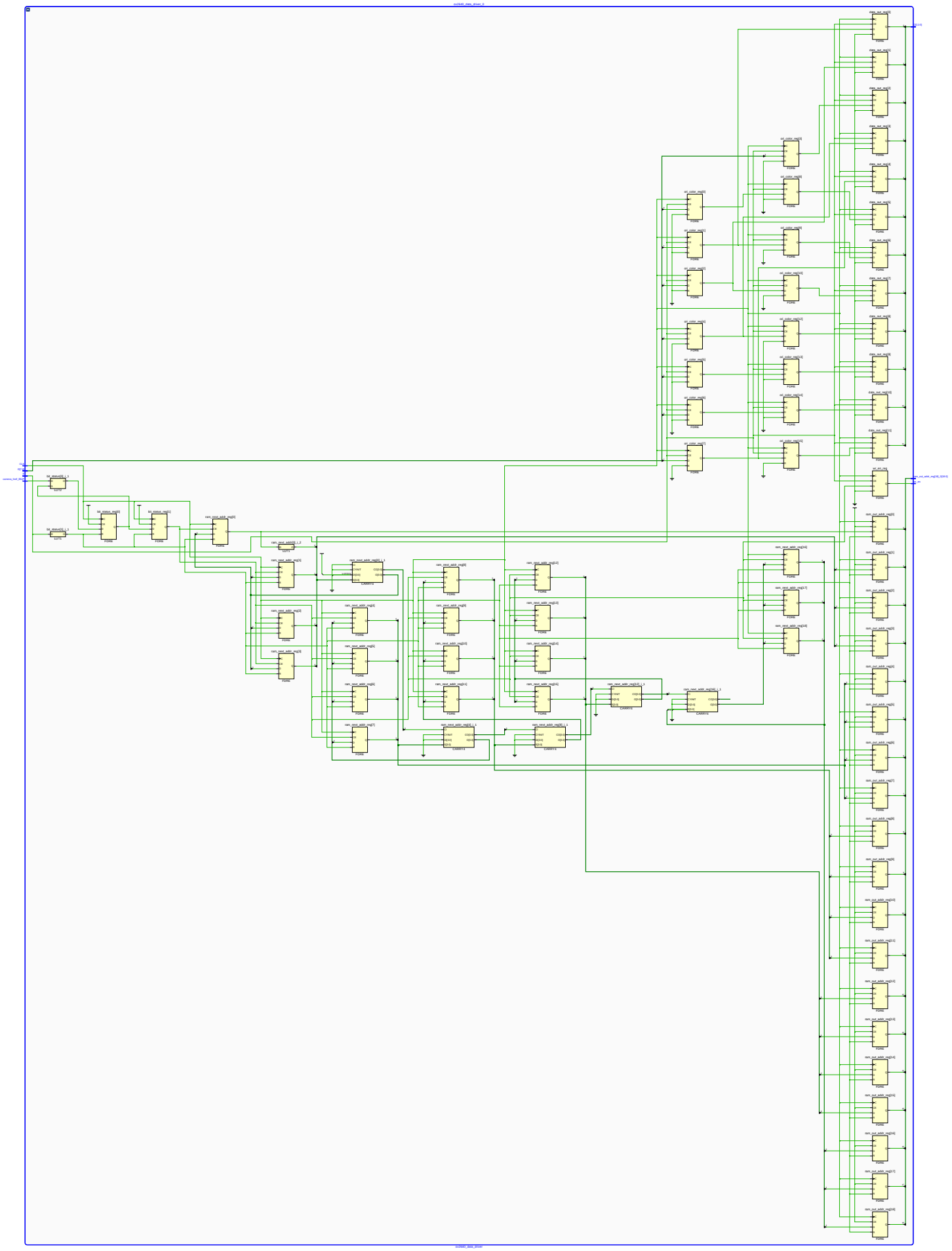
ov2640_data_driver_0
ov2640_data_driver
LUT4
FDRE
CARRY4