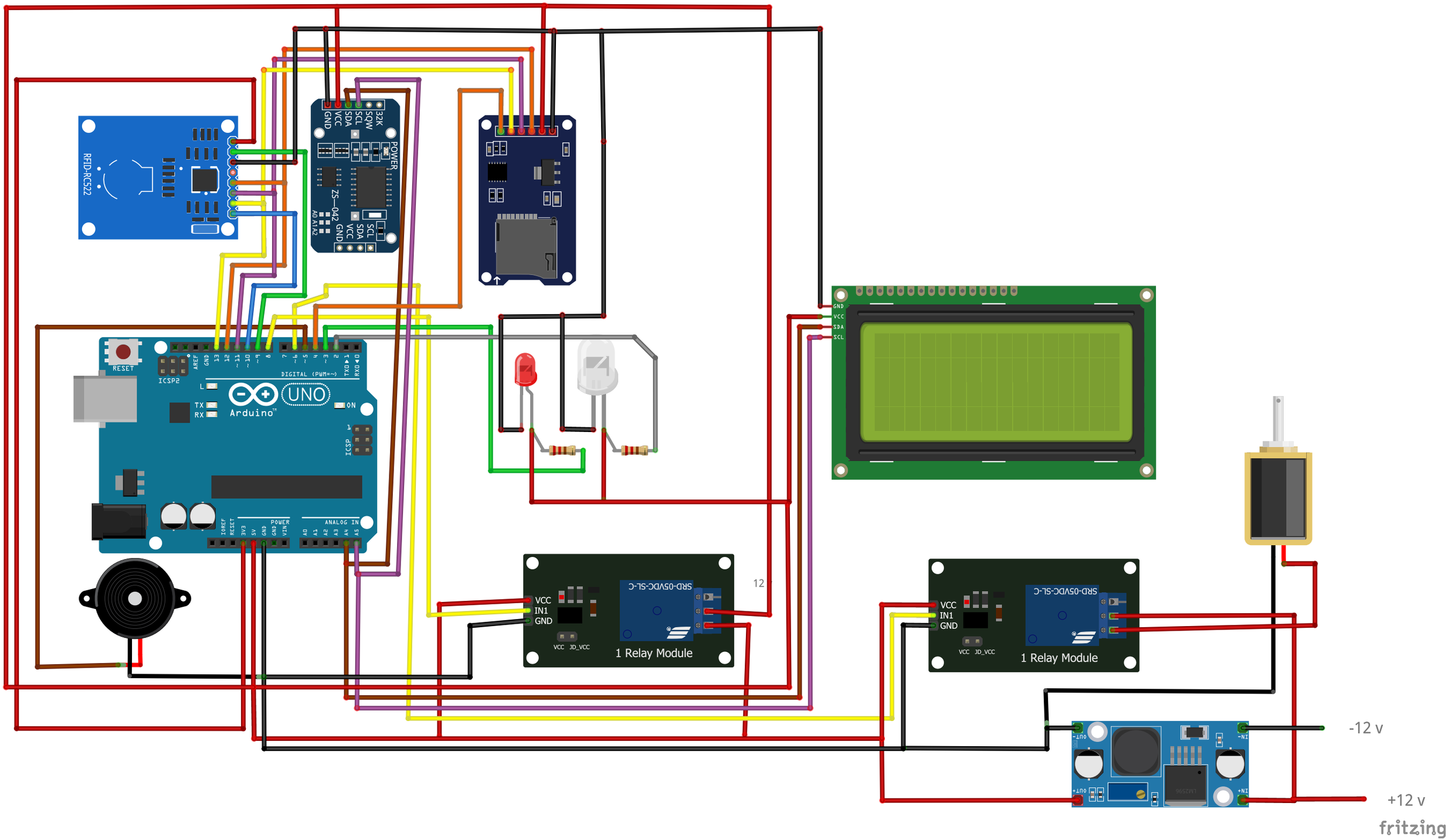
RFID-RC522
32K
SQW
SCL
SDA
VCC
GND
POWER
ZS-042
RESET
ICSP2
DIGITAL (PWM=~)
UNO
Arduino
ICSP
POWER
ANALOG IN
VCC
IN1
GND
SRD-05VDC-SL-C
1 Relay Module
VCC
IN1
GND
SRD-05VDC-SL-C
1 Relay Module
GND
VCC
SDA
SCL
-12 v
+12 v
fritzing