Arduino-Based Modular Athletic Vest

User Manual & Research Guide

Prototype V5

Capstone Group 41, College of Engineering

Date: March 6, 2026

Table of Contents

Contents

Table of Contents 2
1. Intended Purpose and Use Limitations 4
2. What's Included (Package Contents) 4
3. Device Description (How the System Works) 5
4. Safety Information 5
4.1 Electrical and handling safety 5
4.2 Environmental safety 5
4.3 Personal safety 5
5. Setup and Assembly 5
5.1 Cable routing (if cable was removed) 5
5.2 Installing electronics into enclosure 7
6. Operating Instructions (How to Start and Use) 8
6.1 Power on and GPS lock (outdoor) 8
6.2 Polar chest strap setup 9
6.3 Start workout configuration (phone) 10
7. Settings and Recommendations (User-Tunable) 10
7.1 GPS mode 10
7.2 Parameters 11
7.3 Goals 11
8. Data Logging and File Export 11
8.1 How data is stored 11
8.2 CSV columns (what they mean) 11
9. Shutdown Procedure (How to Turn Off and Disassemble) 11
10. Maintenance, Cleaning, and Storage 12
10.1 Cleaning 12
10.2 Storage 12
11. Modularity and Expansion (Arduino-Compatible Sensors) 12
12. Troubleshooting and Common Errors 12
12.1 No GPS lock / speed stuck at 0 (outdoor) 12
12.2 Polar won't pair / HR shows "???" / unreasonable HR 13
12.3 LCD screen is blank 13
12.4 SD not logging / missing CSV files 13

13. Quick Start Checklist 13
14. Use Example 13
14,1 Cable routing 13
14.2 Vest setup 16
14.3 Disassemble vest 21

1. Intended Purpose and Use Limitations

The Arduino-Based Modular Athletic Vest is a wearable fitness-tracking system designed to record workout data such as heart rate, speed/pace (outdoor GPS), step count, and breathing estimates. It is intended for personal fitness training, experimentation, and Arduino-based sensor integration.

This device is not intended for medical purposes. It does not diagnose, treat, monitor, or prevent any disease or medical condition. All outputs should be treated as fitness-level estimates, not clinical measurements.

Use limitations and environment:

- Not rain/IP-rated: Do not use in rain, showers, or wet environments. The enclosure and electronics are not waterproof or IP-certified.
- Indoor use is limited: GPS typically will not lock indoors without a clear view of the sky, so speed/pace may be unavailable indoors.
- Normal sweat is acceptable. Wipe down after use.
- Avoid extreme temperatures. Storage/operation above 85°C is not recommended.

2. What's Included (Package Contents)

Your kit includes the following components:

- Enclosed space (V5): battery/top/bottom pieces; two side holes for nuts/bolts securing
- Nuts and bolts (for enclosure fastening)
  - M3 x7
  - M4 x2
- Haimont 10L running Vest
- Arduino + PCB "motherboard" assembly (PCB preserves Arduino pins through female headers)
- SparkFun GPS module - Chip Antenna, SAM-M10Q (Qwiic)
- SparkFun OpenLog module (Qwiic)
- MicroSD card (recommended: SanDisk 32GB Ultra, FAT32, 32GB)
- MicroSD USB card reader
- MPU6050 Gyroscope/IMU
- JST cable harness (2.54 mm JST + 2.0 mm JST LCD end)
- Qwiic wires
- ST7789 LCD screen + wrist case with Velcro
- Power bank (INIU P41L-E2 class, 45W, 10,000 mAh)
- Polar H10 chest strap + sensor (battery pre-installed)

What the user must provide:

- Smartphone (for Vest_Setup Wi-Fi configuration)
- Laptop/computer (for viewing CSV files)

3. Device Description (How the System Works)

The vest system consists of a wearable platform (vest + wrist display) connected to a modular electronics enclosure that houses the Arduino and sensor/logging hardware. The vest records data during exercise and logs it to a microSD card as a CSV file for post-workout analysis. The system is intentionally modular so users can remove the Arduino/PCB assembly and attach additional Arduino-compatible sensors using available interfaces.

Major subsystems:

- Electronics enclosure: Holds Arduino + PCB, power connection, and sensor modules.
- Wrist display: LCD shows workout information and status.
- Sensor suite: GPS (outdoor speed/pace), IMU for steps/motion, Polar chest strap for HR and breathing estimate.
- Data logging: OpenLog + microSD stores workout CSV files for analysis.

4. Safety Information

4.1 Electrical and handling safety

This is an electronics-based fitness device. Use common electrical safety precautions. If anything smells hot, shuts off unexpectedly, or becomes unusually warm, immediately power down (unplug the power bank).

- Do not expose electronics to water (no rain, no submersion, no wet cleaning while electronics are installed).
- Do not operate with cracked housings, damaged insulation, or loose wiring.
- Do not modify wiring while the device is powered.

4.2 Environmental safety

- Not IP-rated: Do not use in rain or wet environments.
- Avoid dust-heavy or sandy environments that can contaminate connectors.
- Avoid extreme heat; do not leave in a hot vehicle.

4.3 Personal safety

- Route cables to avoid snagging during running.
- Wear the Polar chest strap comfortably; discontinue use if irritation occurs.
- If you have an implanted electronic device (e.g., pacemaker), use caution with wearable electronics and consult a professional if uncertain.

5. Setup and Assembly

5.1 Cable routing (if cable was removed)

The cable is usually already routed through the vest and wrist case. If it is removed accidentally, reroute it as follows:

Figure 4. Cable routing through vest compartments (example layout).

1. Route the 2.54 mm JST end through the hole between the water compartment (largest compartment) and bottom compartment.
2. Route the 2.0 mm LCD JST end through the hole on the right shoulder.

Figure 5. Recommended cable path from vest to wrist-mounted LCD (right arm).

3. Connect the 2.0 mm JST to the LCD and route the LCD/cable through the wrist case opening.
4. Secure the LCD in the wrist case using Velcro.
5. Tuck slack into the right chest pockets to keep the cable compact.

5.2 Installing electronics into enclosure

6. Route the 2.54 mm JST connector through the top-left hole of the enclosure cap.
7. Place the Arduino-PCB assembly in the enclosure with the Arduino USB-C port facing the wall-less side.
8. Plug the 2.54 mm JST connector into the PCB.
9. Insert the microSD card into the OpenLog until you feel/hear a secure “click.” (If it does not click, it may not log.)

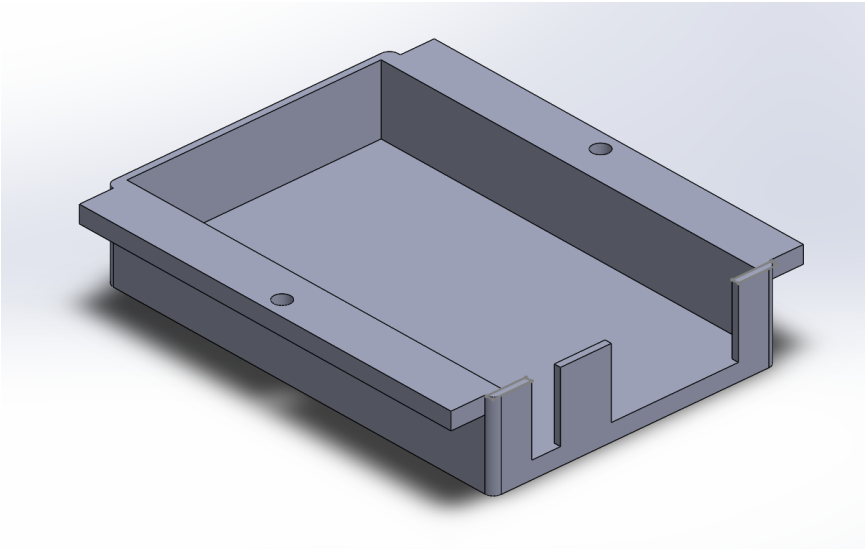

Figure 1. Enclosure V5 (top piece)

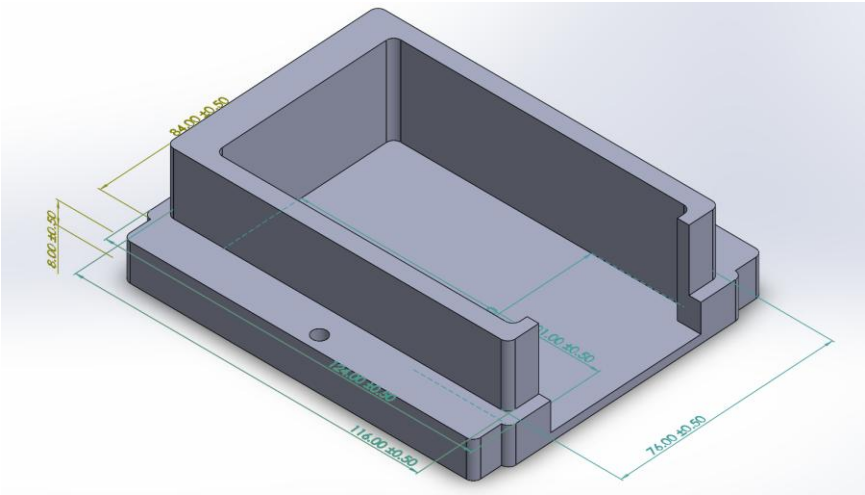

Figure 2. Enclosure V5 (assembled view with key dimensions)

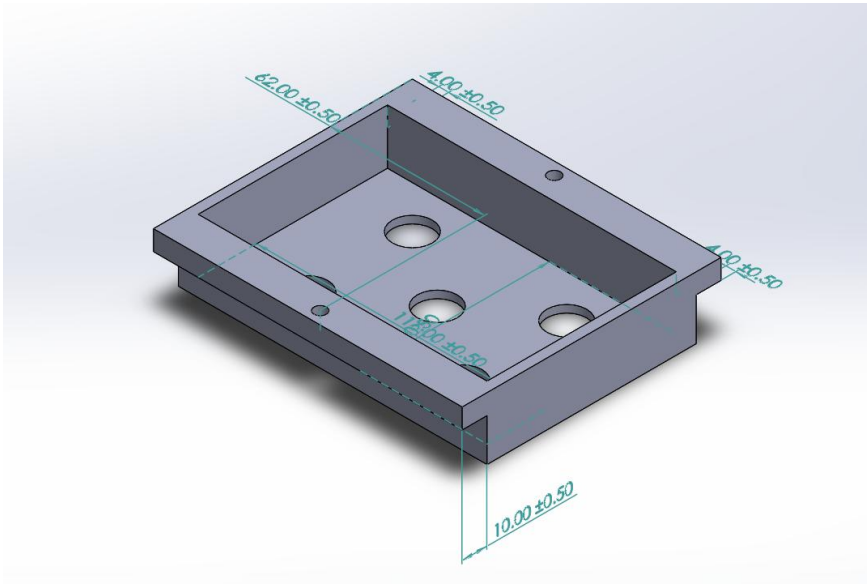

Figure 3. Enclosure V5 (bottom piece)

6. Operating Instructions (How to Start and Use)

6.1 Power on and GPS lock (outdoor)

Follow this sequence for reliable startup:

10. Power the Arduino via USB-C using the power bank.
11. For outdoor use, place the device with a clear view of the sky and wait for GPS lock. Normal wait time is 1–2 minutes.

Figure 7. GPS module: PPS indicator (highlighted) blinks when satellites are locked.

12. Install the enclosure cap and secure it using nuts and bolts.
13. Place the enclosure in the bottom compartment and close the zipper.

Figure 6. Electronics enclosure placement in the bottom compartment (example).

LED indicators: The power bank, GPS, IMU, and OpenLog will show indicator LEDs when powered, which confirms the system is receiving power.

6.2 Polar chest strap setup

Moisten the electrode area of the Polar chest strap and wear it snugly on the chest for reliable heart-rate detection. Detach the Polar sensor from the strap when finished to preserve battery life (typical sensor battery life is approximately 400 hours).

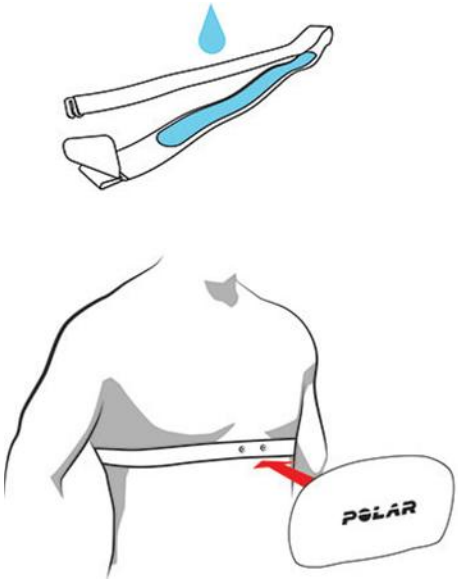

Figure 9. Polar chest strap setup: moisten electrode area and wear snugly on chest.

If the vest shows “???” for HR, the strap is not being detected. The most common cause is a dry strap. Moisten the strap and reseat it snugly. If the issue persists, power cycle the device (unplug the power bank, then restart).

6.3 Start workout configuration (phone)

14. Put the vest on.
15. Put the wrist case on the right arm (left arm may invert display text).
16. On your phone, connect to the Wi-Fi network “Vest_Setup”.
17. Navigate to 192.168.4.1 in your browser to configure settings and goals.

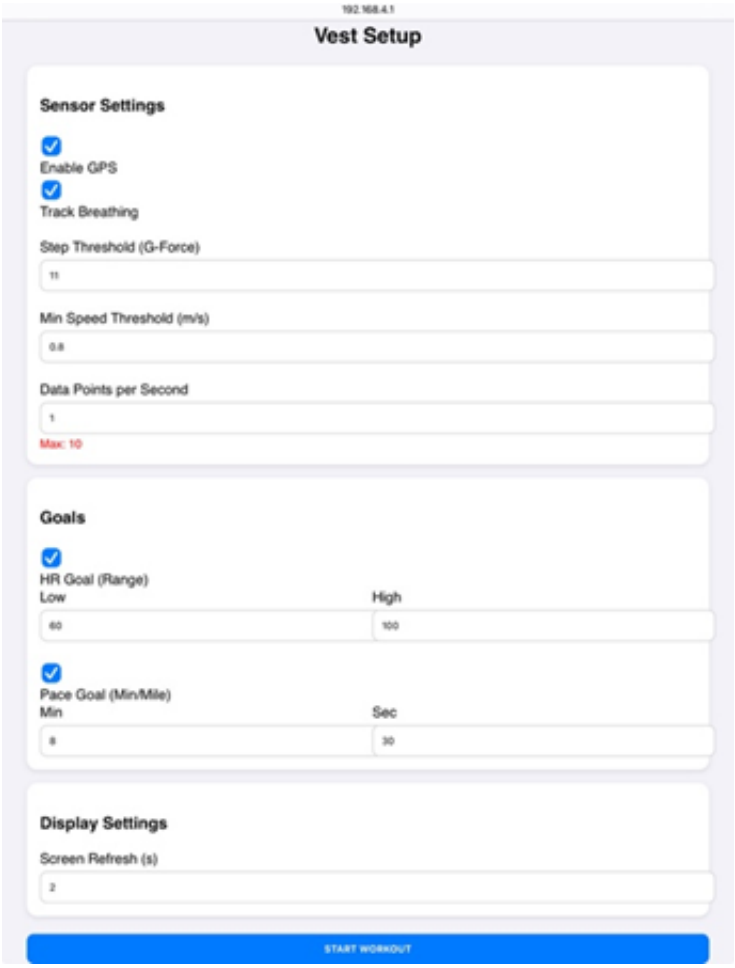

Figure 8. Vest_Setup configuration page (GPS can be disabled for indoor workouts).

18. Tap Start Workout to begin pairing and logging. You may begin exercising after pairing completes.

7. Settings and Recommendations (User-Tunable)

7.1 GPS mode

- Indoor: Turn OFF GPS in setup (speed/pace will not be reliable indoors).
- Outdoor: Turn ON GPS to track speed/pace (requires clear view of sky).

7.2 Parameters

Step Threshold (G-force): magnitude above which a step is counted. Recommended values:

- Walking: ~11G
- Running: ~13G

Min Speed Threshold (m/s): filters false non-zero speed when stationary. Recommended range: 0.6–0.8 m/s. Higher values reduce stationary drift but may be less sensitive to slow walking; lower values are more sensitive but may show more low-speed noise.

Data Points per Second: how often data is saved to microSD. Users may select 1–10 points/sec. Higher rates increase file size and may reduce battery life slightly.

7.3 Goals

- HR goal: defines the target HR range used for status feedback.
- Pace goal: defines the outdoor pace threshold used for “speed up/on pace” feedback.

8. Data Logging and File Export

8.1 How data is stored

Workout data is saved to the microSD card as a CSV file. To read the data, remove the microSD card and use the included USB reader on a laptop.

File naming format: MMDDHHMM (example: 01242003 = Jan 24 at 20:03).

8.2 CSV columns (what they mean)

- MILLIS: Arduino elapsed time (ms) since startup
- HR: heart rate (bpm)
- PACE_MIN / PACE_SEC: outdoor pace in min/mile (when GPS is enabled and locked)
- SPEED_MS: speed in meters/second
- ACTIVITY: STOP / WALK / JOG / RUN / SPRINT classification based on filtered speed
- BREATHS: estimated breath count (derived from RR intervals when available)
- STEPS: step count from IMU thresholding

Excel note: CSV files may auto-format fields. If something looks wrong, import the CSV and set columns to “Text” or “Number” as appropriate.

9. Shutdown Procedure (How to Turn Off and Disassemble)

Follow this shutdown order to preserve data and prevent corruption:

19. Remove the LCD wrist case and tuck slack into the right chest pocket if desired.
20. Remove the vest.
21. Detach the Polar sensor from the strap to turn it off and preserve battery life.
22. Open bottom compartment and remove the enclosure.
23. Remove nuts/bolts and open the enclosure.

24. Unplug the power bank from the Arduino to power off.
25. Remove the microSD card from the OpenLog.
26. Insert microSD into the USB reader and view CSV files on a laptop.

10. Maintenance, Cleaning, and Storage

10.1 Cleaning

If electronics are installed: clean by wiping only.

- Use a damp cloth.
- Do not submerge.
- Do not rinse under running water.
- Do not use harsh solvents.

Machine washing: The vest fabric may be machine-washed only if ALL electronics are removed, including the enclosure with electronics, the Arduino + PCB assembly (including OpenLog and IMU mounted to it), the LCD/wrist module, the power bank, and all current-carrying cables.

10.2 Storage

- Store dry at room temperature.
- Keep water away from the microSD card and exposed electronics.
- Avoid extreme heat; do not store above 85°C.

11. Modularity and Expansion (Arduino-Compatible Sensors)

The vest is designed to support sensor expansion. Users may remove the Arduino + PCB assembly from the enclosure to attach additional Arduino-compatible sensors. The PCB preserves Arduino pin access via female headers, allowing common interfaces including I2C, UART, SPI, and ADC.
Important safety limits for expansion:

- Do not connect motors, heaters, solenoids, or other high-power loads directly to Arduino pins.
- Keep external sensor loads light. Conservative rule: <= 20 mA per GPIO pin.
- Use external drivers for loads beyond small sensors (not included).
- Verify correct voltage levels for your sensors (3.3V vs 5V) and do not short power rails.

12. Troubleshooting and Common Errors

12.1 No GPS lock / speed stuck at 0 (outdoor)

Likely cause: no clear view of the sky. Fix: move to an open outdoor area, wait 1–2 minutes for lock, and if still not locked, unplug and replug the power bank (power cycle) and retry with clear sky view.

12.2 Polar won't pair / HR shows "???" / unreasonable HR

Likely cause: strap electrodes are dry or strap not snug. Fix: moisten electrode areas and reseat strap firmly. If HR still shows "???", unplug and replug the power bank and repeat startup.

12.3 LCD screen is blank

Likely cause: JST connection loosened. Fix: check both JST connections are fully seated. Unplug and replug the power bank to restart.

12.4 SD not logging / missing CSV files

Likely causes: SD not inserted, or not fully seated. Fix: confirm microSD is inserted into OpenLog until you hear/feel a "click." Confirm the microSD is the provided/recommended type (SanDisk 32GB Ultra FAT32). Restart the system after reseating the SD card.

13. Quick Start Checklist

- Insert microSD until it clicks.
- Connect JST harness to PCB and LCD.
- Plug in power bank (LEDs indicate powered sensors).
- Outdoor: wait for GPS PPS blink (1–2 min) before closing enclosure.
- Put on chest strap (moisten electrodes).
- Phone: connect to Vest_Setup -> go to 192.168.4.1 -> set parameters -> Start Workout.
- After workout: unplug power bank -> remove microSD -> read CSV on laptop.

14. Use Example

14,1 Cable routing

Note: Cable should already be routed into vest and wrist case, but below is step-by-step guide for users to route cable back into the vest and wrist case, should they accidentally take it out.

1. Route the 2.54-mm JST end of the cable through the hole between the water compartment (i.e., largest compartment) and bottom compartment

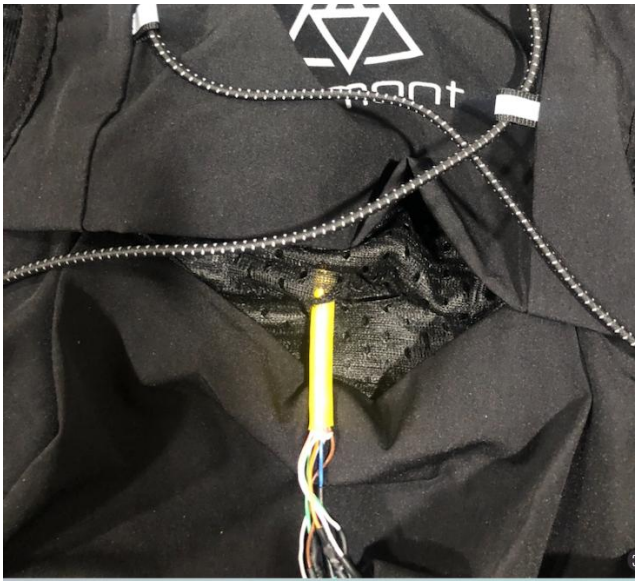

2. Route the 2-mm LCD JST end of the cable through the hole on the right shoulder.

3. Connect 2-mm JST to the LCD and route the LCD and cable through the hole on the wrist case.
4. Secure the LCD in the wrist case with Velcro.

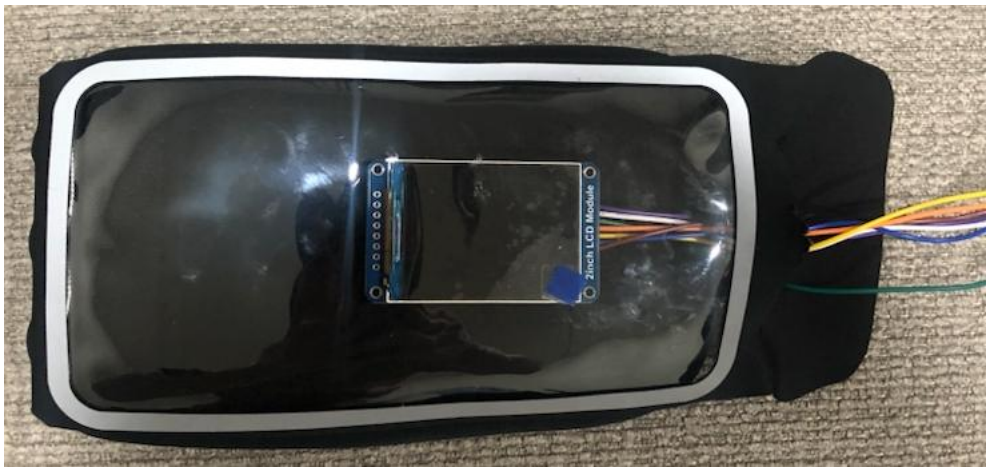

5. To keep cable compact, the LCD wrist case and cable slack may be tucked into the right chest pockets on the vest.

14.2 Vest setup

1. Route the 2.54-mm JST connector through the TOP LEFT hole of the enclosure cap.

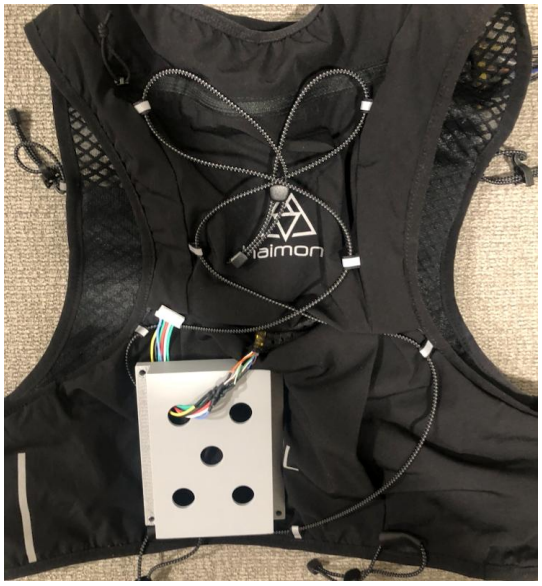

2. Put Arduino-PCB complex in the enclosure, with the USB-C port on the Arduino facing the wall-less side.
3. Plug the 2.54-mm JST connector to the PCB.
4. Power on the Arduino via the USB-C port with the power bank.

5. If used OUTDOORS [OMITTED FOR INDOOR USE], give the SparkFun SAM-M10Q GPS a clear view of the sky. Make sure that the PPS light thereon is blinking, which signifies that the sensor successfully locks with satellite for location and speed tracking before closing the enclosure.

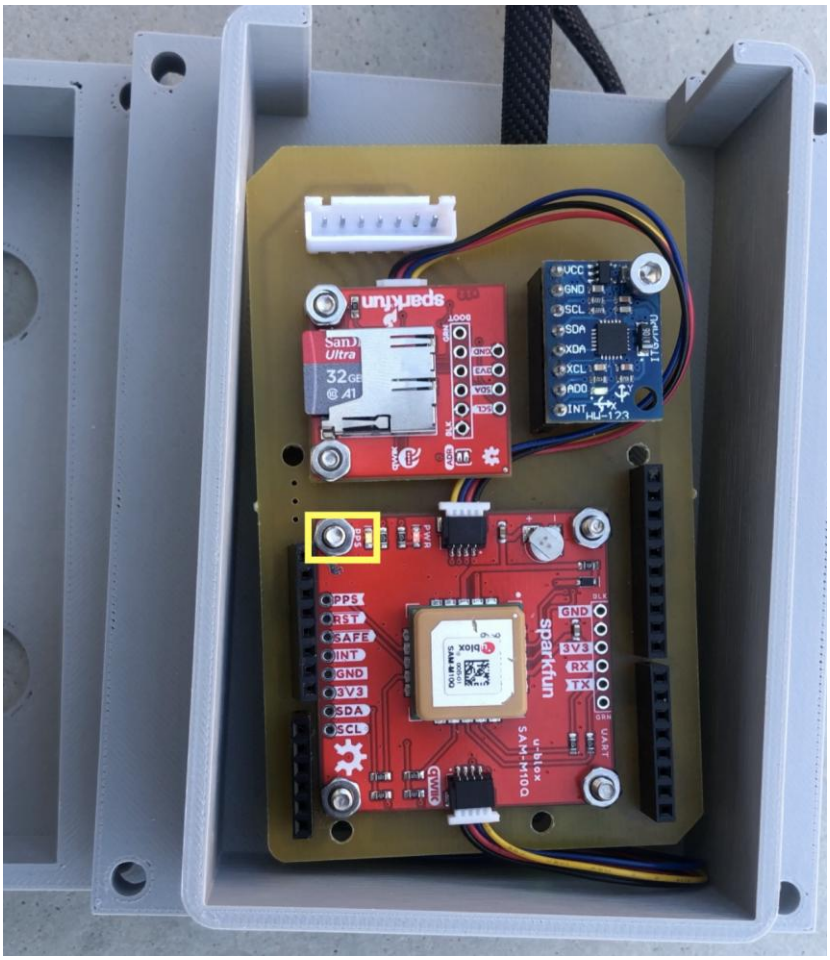

6. Put the enclosure cap on and secure with nuts and bolts.

7. Put the enclosure in the bottom compartment and close the zipper.

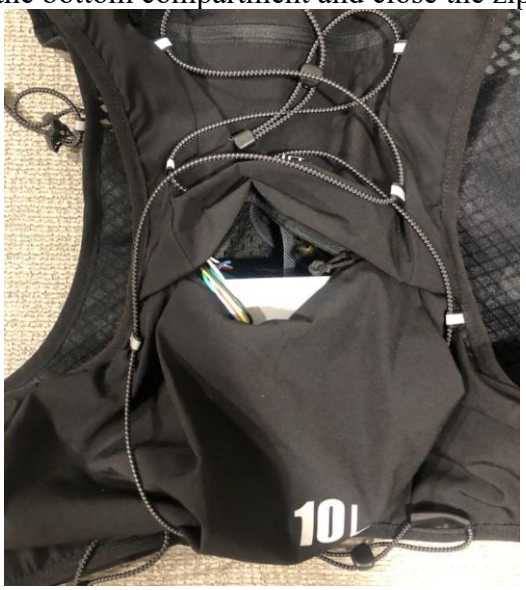

8. Moisten the electrode area of the Polar chest strap and put it on the chest. The sensor is ON as long as it is attached to the strap. To turn the the sensor OFF, it needs to be detached.

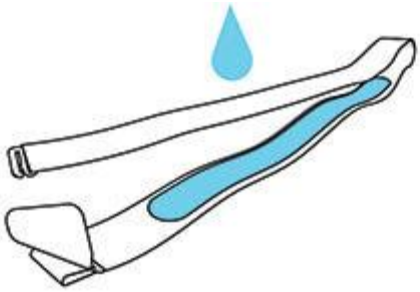

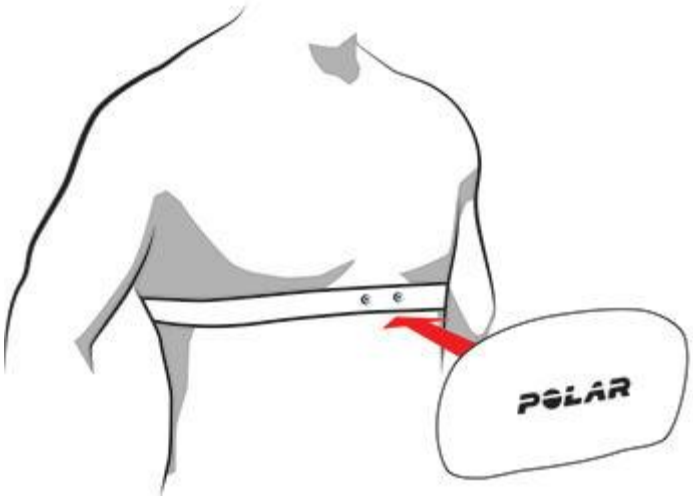

9. Put the vest on.

10. Put the wrist case on the right arm [NOTE: Using the left arm with result in inverted texts]
11. On your phone, connect to the Wi-Fi “Vest_Setup”

12. Go to 192.168.4.1 local server on your browser to set up sensor parameters and goals before starting exercise.
    a. TURN OFF GPS for INDOOR USE. TURN ON GPS for OUTDOOR USE to track speed.
    b. Parameters:
        i. Step Threshold: G-Force above which a step is counted. RECOMMEND 11G for walking and 13G for running
        ii. Min Speed Threshold:
            1. Eliminate errors of positive speed when user is stationary.
            2. Higher threshold = More effective error filter, but less sensitive to walking speed
            3. Lower threshold = More positive speed noise at low speed and stationary state, but more sensitive to walking speed
            4. RECOMMEND threshold of 0.6-0.8 m/s
        iii. Data Points per Second: Rate at which data is saved into the microSD card storage
    c. Goals:
        i. HR goal: The range outside of which HR is considered abnormal
        ii. Pace goal: Running pace, slower than which is considered failing
    d. Display settings: How often LCD screen is refreshed with new measurements

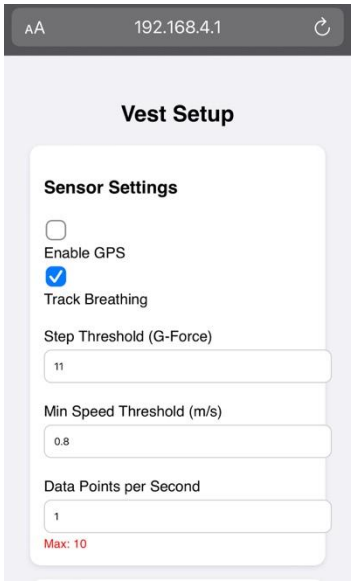

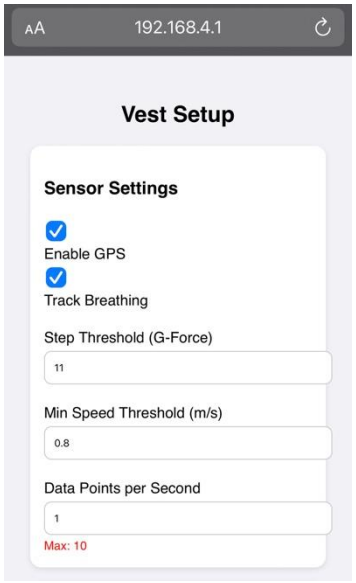

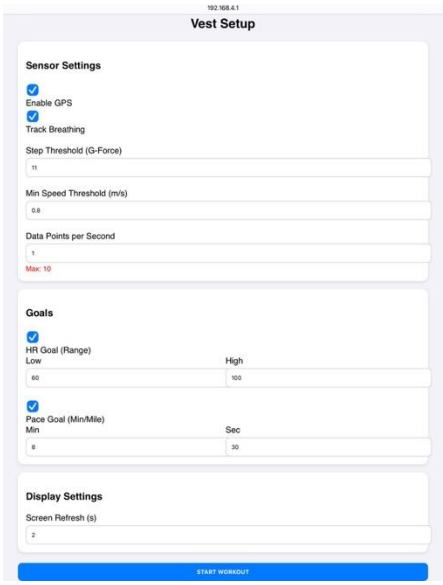

13. Hit “Start Workout” on the local server to start pairing sensors. You can start exercise when pairing is complete!

14.3 Disassemble vest

1. Take off the LCD wrist case. To keep cable compact, the LCD wrist case and cable slack may be tucked into the right chest pockets on the vest.

2. Take off the vest.
3. Detach the Polar sensor from the chest strap to turn it off and save sensor battery.
4. Open the bottom compartment and take the enclosure out.

5. Take off the nuts and bolts and open the enclosure.
6. Unplug the power bank from the Arduino to power off.
7. Take the microSD card out from the SparkFun OpenLog.
8. The microSD card may be read on a laptop using USB reader, allowing users to view their exercise data in CSV files.

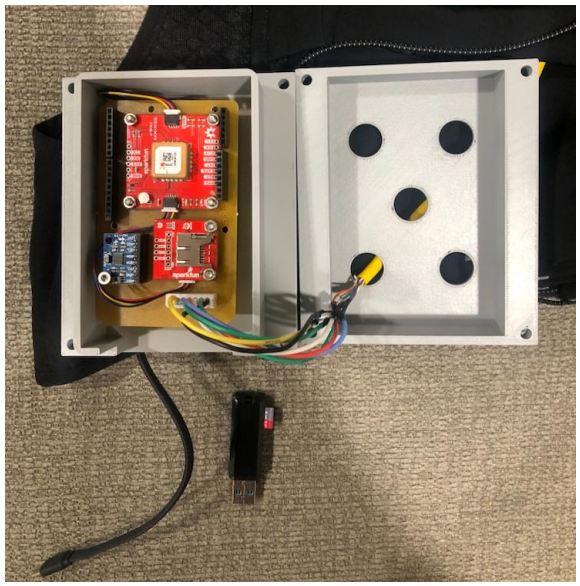

9. The naming format is MMDDHHMM (e.g., 01242003 = Jan 24, 20:03)

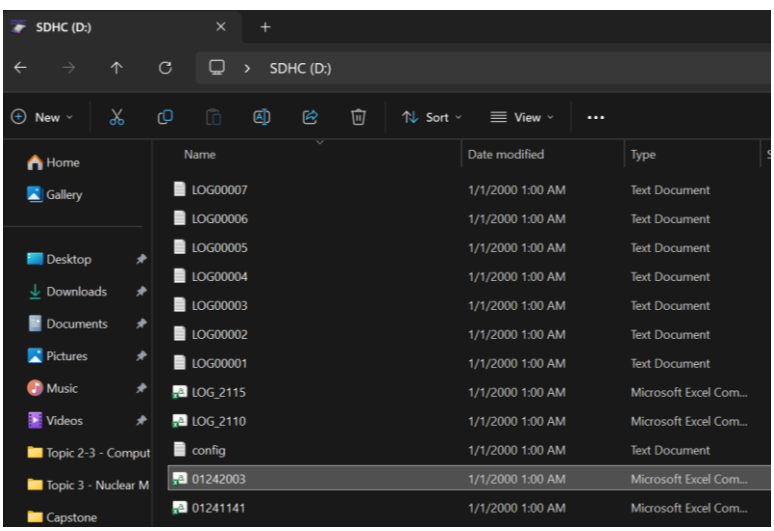

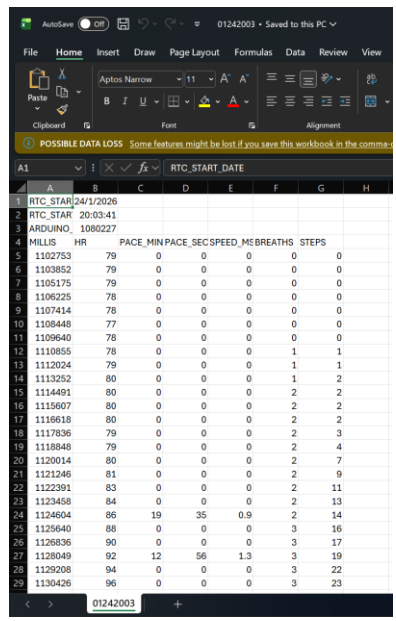

	A	B	C	D	E	F	G
1	RTC_STAR	24/1/2026					
2	RTC_STAR	20:03:41					
3	ARDUINO_	1080227					
4	MILLIS	HR	PACE_MIN	PACE_SEC	SPEED_MS	BREATHS	STEPS
5	1102753	79	0	0	0	0	0
6	1103852	79	0	0	0	0	0
7	1105175	79	0	0	0	0	0
8	1106225	78	0	0	0	0	0
9	1107414	78	0	0	0	0	0
10	1108448	77	0	0	0	0	0
11	1109640	78	0	0	0	0	0
12	1110855	78	0	0	0	1	1
13	1112024	79	0	0	0	1	1
14	1113252	80	0	0	0	1	2
15	1114491	80	0	0	0	2	2
16	1115607	80	0	0	0	2	2
17	1116618	80	0	0	0	2	2
18	1117836	79	0	0	0	2	3
19	1118848	79	0	0	0	2	4
20	1120014	80	0	0	0	2	7
21	1121246	81	0	0	0	2	9
22	1122391	83	0	0	0	2	11
23	1123458	84	0	0	0	2	13
24	1124604	86	19	35	0.9	2	14
25	1125640	88	0	0	0	3	16
26	1126836	90	0	0	0	3	17
27	1128049	92	12	56	1.3	3	19
28	1129208	94	0	0	0	3	22
29	1130426	96	0	0	0	3	23