Engineering Electromagnetics II
Homework #1
106 points total

ECE 332 – Spring 2026

Due Tuesday, April 21, 2026

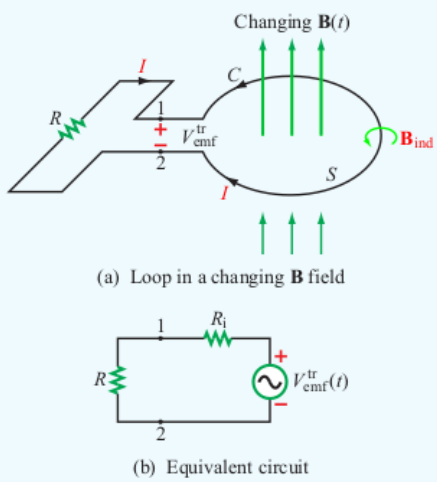

Figure 6-2 (a) Stationary circular loop in a changing magnetic field $\mathbf{B}(t)$, and (b) its equivalent circuit.

1. The loop shown above is in the x-y plane and $\mathbf{B} = \hat{\mathbf{z}} B_0 \sin \omega t$. What is the direction of I ($\hat{\boldsymbol{\phi}}$ or $-\hat{\boldsymbol{\phi}}$) at:

   (a) $t = 0$ (5 points)

   (b) $\omega t = \pi/4$ (5 points)

   (c) $\omega t = \pi/2$ (5 points)

   Explain your answers. (15 points total)

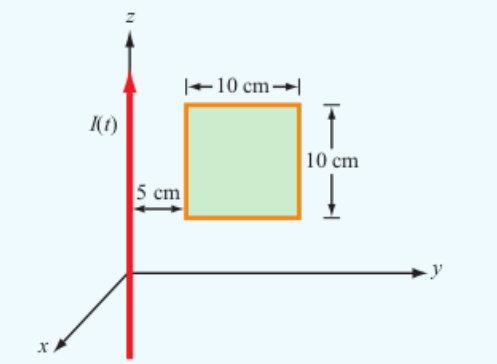

Figure P6.6 Loop coplanar with long wire (Problem 6.6).

2. The square loop shown above is coplanar with a long, straight wire carrying a current

$$I(t) = 5\cos\left(\left(2\pi \times 10^4 \text{ rad/s}\right)t\right) \text{ A}.$$

(14 points total)

(a) Determine the emf induced across a small gap created in the loop. (8 points)

(b) Determine the direction and magnitude of the current that would flow through a 4Ω resistor connected across the gap. The loop has an internal resistance of 1Ω. (6 points)

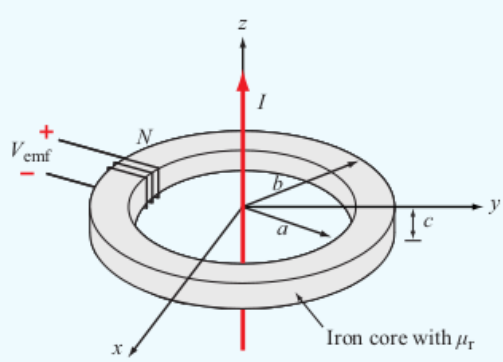

Figure P6.8 Problem 6.8.

3. The transformer shown above consists of a long wire coincident with the z axis carrying a current $I = I_0 \cos \omega t$, coupling magnetic energy to the toroidal coil situated in the $x - y$ plane and centered on the origin. The toroidal core uses iron material with relative permeability μ_r, around which 100 turns of a tightly wound coil serves to induce a voltage V_{emf}, as shown in the figure. (15 points total)

   (a) Develop an expression for V_{emf}. (10 points)

   (b) Calculate V_{emf} for $f = 60$ Hz, $\mu_r = 4000$, $a = 5$ cm, $b = 6$ cm, $c = 2$ cm, and $I_0 = 50$ A. (5 points)

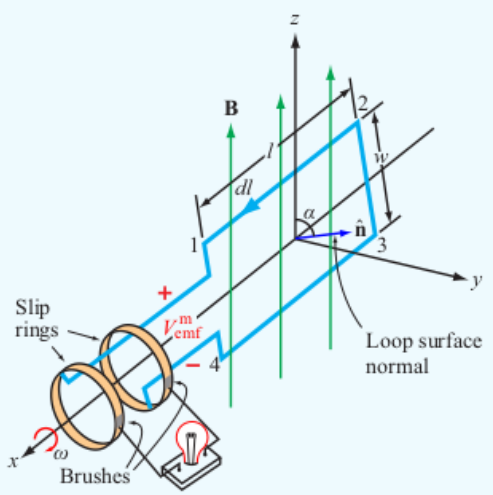

Figure 6-12 A loop rotating in a magnetic field induces an emf.

4. The electromagnetic generator shown above is connected to an electric bulb with a resistance of 150Ω. If the loop area is 0.1 m^2 and it rotates at 3,600 revolutions per minute in a uniform magnetic flux density $B_0 = 0.4$ T, determine the amplitude of the current generated in the light bulb. (6 points)

5. The plates of a parallel-plate capacitor have areas of 10 cm^2 each and are separated by 2 cm. The capacitor is filled with a dielectric material with $\epsilon = 4\epsilon_0$, and the voltage across it is given by $V(t) = 30 \cos\left((2\pi \times 10^6 \text{ rad/s})\, t\right)$ V. Find the displacement current. (6 points)

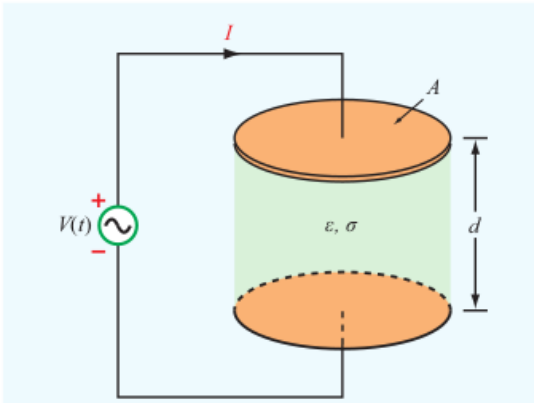

Figure P6.16 Parallel-plate capacitor containing a lossy dielectric material (Problem 6.16).

6. The parallel-plate capacitor shown above is filled with a lossy dielectric material of relative permittivity ϵ_r and conductivity σ. The separation between the plates is d and each plate is of area A. The capacitor is connected to a time-varying voltage source $V(t)$. (24 points total)

   (a) Obtain an expression for I_c, the conduction current flowing between the plates inside the capacitor, in terms of the given quantities. (6 points)

   (b) Obtain an expression for I_d, the displacement current flowing inside the capacitor. (6 points)

   (c) Based on your expressions for parts (a) and (b), give an equivalent-circuit representation for the capacitor. (6 points)

   (d) Evaluate the values of the circuit elements for $A = 4$ cm^2, $d = 0.5$ cm, $\epsilon_r = 4$, $\sigma = 2.5$ S/m, and

   $$V(t) = 10\cos\left(\left(3\pi \times 10^3 \text{ rad/s}\right) t\right).$$

   (6 points)

7. At $t = 0$, charge density ρ_{v0} was introduced into the interior of a material with a relative permittivity $\epsilon_r = 9$, If at $t = 1\mu$s the charge density has dissipated down to $10^{-3}\rho_{v0}$, what is the conductivity of the material? (6 points)

8. If we were to characterize how good a material is an an insulator by its resistance to dissipating charge, which of the following two materials is the better insulator? (6 points)

Dry Soil:	$\epsilon_r = 2.5,$	$\sigma = 10^{-4}$ S/m
Fresh Water:	$\epsilon_r = 80,$	$\sigma = 10^{-3}$ S/m

9. The electric field of an electromagnetic wave propagating in air is given by

$$\mathbf{E}(z,t) = \Big(4\cos\Big(\Big(6\times 10^8 \text{ rad/s}\Big)t - (2 \text{ m}^{-1})z\Big)\,\hat{\mathbf{x}} \\ + 3\sin\Big(\Big(6\times 10^8 \text{ rad/s}\Big)t - (2 \text{ m}^{-1})z\Big)\,\hat{\mathbf{y}}\Big) \text{ V/m}.$$

Find the associated magnetic field $\mathbf{H}(z,t)$. (6 points)

10. Given an electric field

$$\mathbf{E} = E_0 \sin(ay)\cos(\omega t - kz)\hat{\mathbf{x}},$$

where E_0, a, ω, and k are constants, find $\mathbf{H}$. (8 points)