ECE 332: Engineering Electromagnetics II

Lecture 2

Mark A. Martin

Portland State University

April 2, 2026

Last Class

- I gave you a big-picture review of ECE 331.
- The 4 vector fields **E**, **D**, **B**, and **H** describe electromagnetic phenomena and determine the forces that charges and currents experience.
- The effects of different sources can be evaluated separately and superposed to determine the overall effect.
- These fields satisfy and are determined by Maxwell's equations.
- When any charges that aren't part of a current are fixed in place (electrostatics) and all currents are steady (magnetostatics), Maxwell's equations are decoupled and the equations describing the electric fields can be solved separately from the equations describing the magnetic fields.

Last Class (Continued)

- In the electrostatic and magnetostatic cases, Maxwell's equations have the form

$$\nabla \cdot \mathbf{D} = \rho_v \longleftrightarrow \oint_S \mathbf{D} \cdot d\mathbf{s} = Q \quad \text{(Gauss' Law)} \tag{1}$$

$$\nabla \times \mathbf{E} = \mathbf{0} \longleftrightarrow \oint_C \mathbf{E} \cdot d\mathbf{l} = 0 \quad \text{(Kirchhoff's Law)} \tag{2}$$

(electrostatics)

$$\nabla \cdot \mathbf{B} = 0 \longleftrightarrow \oint_S \mathbf{B} \cdot d\mathbf{s} = 0 \quad \text{(Gauss' Law for Magnetism)} \tag{3}$$

$$\nabla \times \mathbf{H} = \mathbf{J} \longleftrightarrow \oint_C \mathbf{H} \cdot d\mathbf{l} = I \quad \text{(Ampère's Law)} \tag{4}$$

(magnetostatics)

Last Class (Continued)

- You explored **3 ways of finding electrostatic fields** – Maxwell's equations, Coulomb's law, using the scalar electric potential V.
- You explored **3 ways of finding magnetostatic fields** – Maxwell's equations, Biot-Savart law, using the vector magnetic potential $\mathbf{A}$.
- Materials can be **classified** based on their **electric and magnetic properties**.
- You calculated the **energies** associated with static charge configurations and steady currents.
- **Boundary conditions** specify the relationships between the normal and tangential components of the electromagnetic fields on the two sides of an interface between media with different electromagnetic properties.

Last Class (Continued)

- **When charges move and currents vary**, the equations for the electric fields are **coupled** to the equations for the magnetic fields and Maxwell's equations become

$$\nabla \cdot \mathbf{D} = \rho_v \longleftrightarrow \oint_S \mathbf{D} \cdot d\mathbf{s} = Q \quad \text{(Gauss' Law)} \tag{5}$$

$$\nabla \times \mathbf{E} = -\frac{\partial \mathbf{B}}{\partial t} \longleftrightarrow \oint_C \mathbf{E} \cdot d\mathbf{l} = -\oint_S \frac{\partial \mathbf{B}}{\partial t} \cdot d\mathbf{s} \quad \text{(Faraday's Law)} \tag{6}$$

$$\nabla \cdot \mathbf{B} = 0 \longleftrightarrow \oint_S \mathbf{B} \cdot d\mathbf{s} = 0 \quad \text{(Gauss' Law for Magnetism)} \tag{7}$$

$$\nabla \times \mathbf{H} = \mathbf{J} + \frac{\partial \mathbf{D}}{\partial t} \longleftrightarrow \oint_C \mathbf{H} \cdot d\mathbf{l} = \oint_S \left(\mathbf{J} + \frac{\partial \mathbf{D}}{\partial t} \right) \cdot d\mathbf{s} \quad \text{(Ampère's Law)} \tag{8}$$

In general, these would have be **solved simultaneously** to find the electromagnetic fields. We won't do this. Instead, we'll start by following **early explorations into electromagnetic phenomena**.

Faraday's Law

Since electric currents create magnetic fields, it is reasonable to think that magnetic fields might produce electric currents.

Experiments showed ...

Magnetic fields produce an electric current in a closed conducting loop only when the magnetic flux through the loop changes over time.

When the battery is disconnected, the flux through the loop drops to 0 and the change in flux induces a current in the loop. The currrent deflects the needle of the galvanometer.

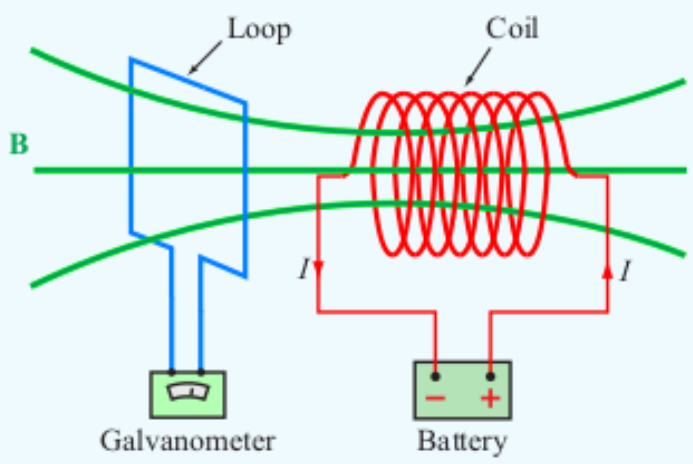

Figure 6-1 The galvanometer (predecessor of the ammeter) shows a deflection whenever the magnetic flux passing through the square loop changes with time.

Faraday's Law (Continued)

The galvanometer responds to the voltage induced across its contacts when the flux changes. This is called **electromagnetic induction**. The magnetic flux through a loop with surface area S in the direction of $d\mathbf{s}$ is

$$\Phi = \int_S \mathbf{B} \cdot d\mathbf{s}, \tag{9}$$

where $d\mathbf{s}$ points in a chosen direction normal to the loop. Suppose that the loop consists of N turns. Then the voltage is the **electromotive force (emf)**

$$V_{\text{emf}} = -N\frac{d\Phi}{dt} = -N\frac{d}{dt}\int_S \mathbf{B} \cdot d\mathbf{s} \tag{10}$$

and this equation is **Faraday's law**.

Faraday's Law (Continued)

Since the derivative applies to all parts of the integral

$$V_{\text{emf}} = -N\frac{d}{dt}\int_S \mathbf{B}\cdot d\mathbf{s}, \tag{11}$$

electromagnetic induction occurs in a closed conducting loop when

1. A **time varying flux** passes through a **stationary loop**, i.e. **B** changes. In this case, the emf is the **transformer emf** $V_{\text{emf}}^{\text{tr}}$.
2. **A loop moves in a stationary magnetic field** and flux changes in direction of the surface area of the loop, i.e. S changes. Here, the emf is the **motional emf** $V_{\text{emf}}^{\text{m}}$.
3. **A loop moves in a time-varying flux**, i.e. both **B** and S change. In this case, there is both transformer and motional emf and the total emf is

$$V_{\text{emf}} = V_{\text{emf}}^{\text{tr}} + V_{\text{emf}}^{\text{m}}. \tag{12}$$

Time-Varying Flux Through a Stationary Loop

First consider what happens when only **B** changes, which is Case 1 above.

In this case, the surface differential $d\mathbf{s}$ doesn't change with time. Therefore, the time derivative in Faraday's law only applies to the magnetic flux density **B** and the emf is the transformer emf (i.e. $V_{\text{emf}}^{\text{m}} = 0$). This means

$$V_{\text{emf}} = V_{\text{emf}}^{\text{tr}} = -N \int_S \frac{\partial \mathbf{B}}{\partial t} \cdot d\mathbf{s}. \qquad (13)$$

This is the voltage measured between points 1 and 2.

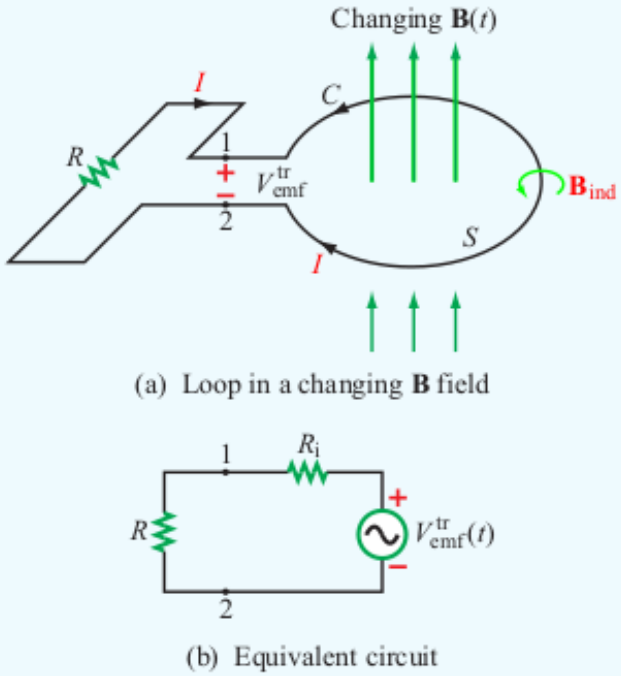

Figure 6-2 (a) Stationary circular loop in a changing magnetic field $\mathbf{B}(t)$, and (b) its equivalent circuit.

Time-Varying Flux Through a Stationary Loop (Continued)

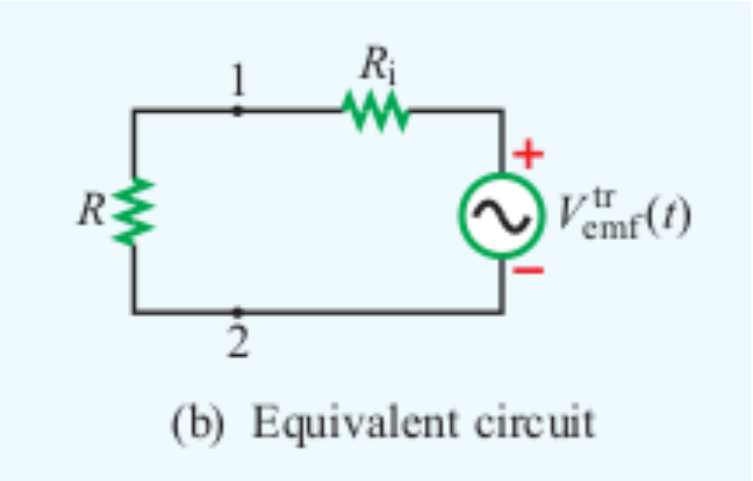

(b) Equivalent circuit

If the internal resistance of the loop is R_i and the load on the circuit is R, then Ohm's law determines the current through the loop as

$$I = \frac{V_{emf}^{tr}}{R + R_i}. \tag{14}$$

Typically, $R_i \ll R$ and $I \approx V_{emf}^{tr}/R$.

Time-varying Flux Through a Stationary Loop (Continued)

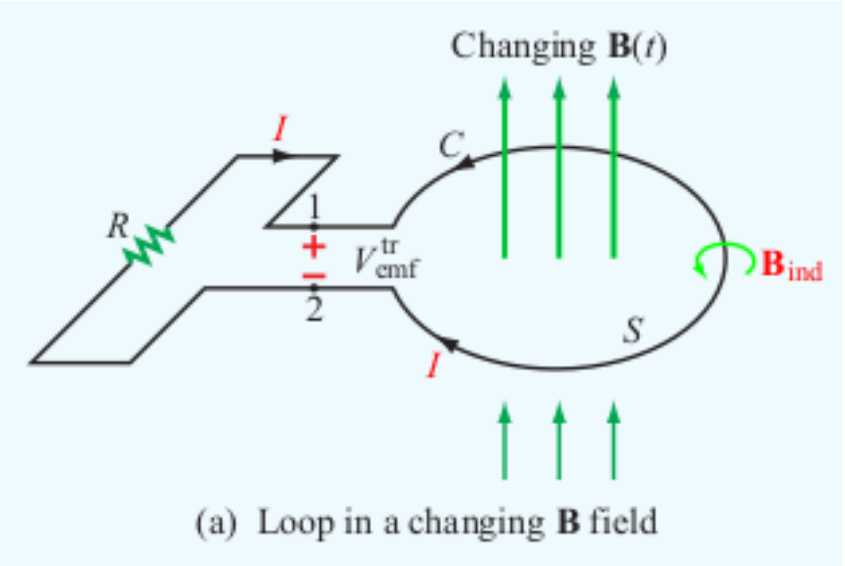

(a) Loop in a changing **B** field

Right-Hand Rule for V_{emf}

Choose a direction for the **normal to the interior surface of the loop**. This is the direction of $d\mathbf{s}$. Next, point the **right thumb** in the direction of the normal. Then the **direction of the contour** C is the direction that the fingers of the right hand curl. This direction also specifies the **reference polarity** from the positive terminal to the negative terminal of V_{emf}. The **sign of V_{emf}** will determine the **direction of current flow**.

Time-varying Flux Through a Stationary Loop (Continued)

The **right-hand rule** makes the formulas we're using **consistent with the physics**.

The **induced current** I creates its own **magnetic field** $\mathbf{B}_{\text{ind}}$ and **magnetic flux** Φ_{ind}. The direction of the current is determined by the relationship between the magnetic field it creates and the change in magnetic flux that induces the current.

Lenz's Law

The current and the polarity of $V_{\text{emf}}^{\text{tr}}$ will always oppose the change in the external magnetic flux $\Phi(t)$. There are 2 cases:

- $\mathbf{B}(t)$ **increasing** $\implies \frac{d\Phi}{dt} > 0$
  and $\mathbf{B}_{\text{ind}}$ points in the **opposite direction to B**.
- $\mathbf{B}(t)$ **decreasing** $\implies \frac{d\Phi}{dt} < 0$
  and $\mathbf{B}_{\text{ind}}$ points in the **same direction as B**.

Time-varying Flux Through a Stationary Loop (Continued)

In both cases, the direction that the current I flows and the polarity of $V_{\text{emf}}^{\text{tr}}$ are determined by the right-hand rule for $\mathbf{B}_{\text{ind}}$. (Note that this is not the same right-hand rule as above, which specifies the directions of the contour C and the surface differential $d\mathbf{s}$.)

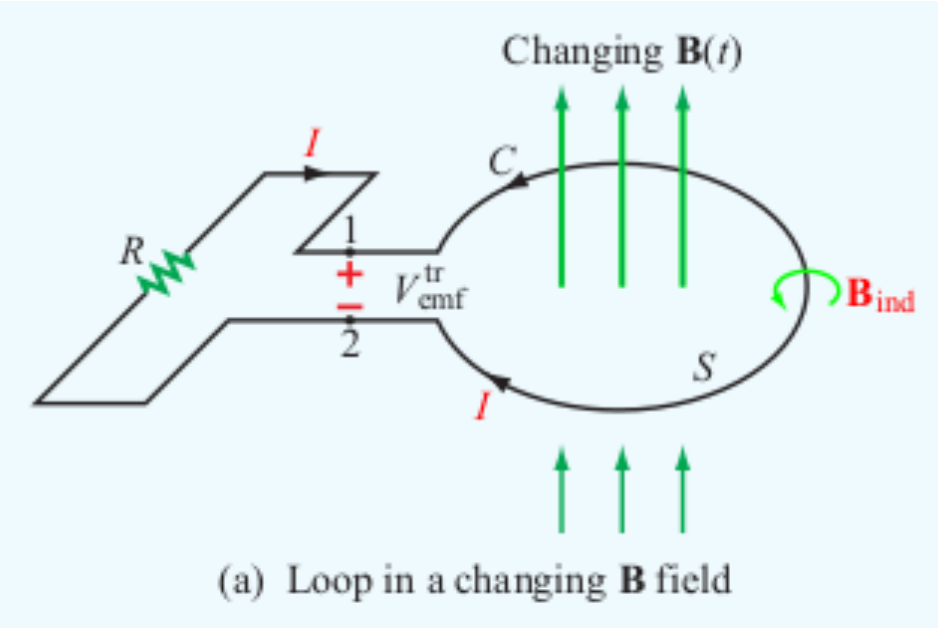

(a) Loop in a changing **B** field

There's a qualitative discussion of Faraday's work in the Feynman Lectures, Volume II, Chapter 16, Section 1 at

https://www.feynmanlectures.caltech.edu/II_16.html

Time-Varying Flux Through a Stationary Loop (Continued)

Suppose that the loop is **closed**, which is approximately true when the gap between the contact points 1 and 2 is small, and that there is **a single turn**, i.e. $N = 1$. Then the electric field intensity $\mathbf{E}$ associated with the induced current satisfies

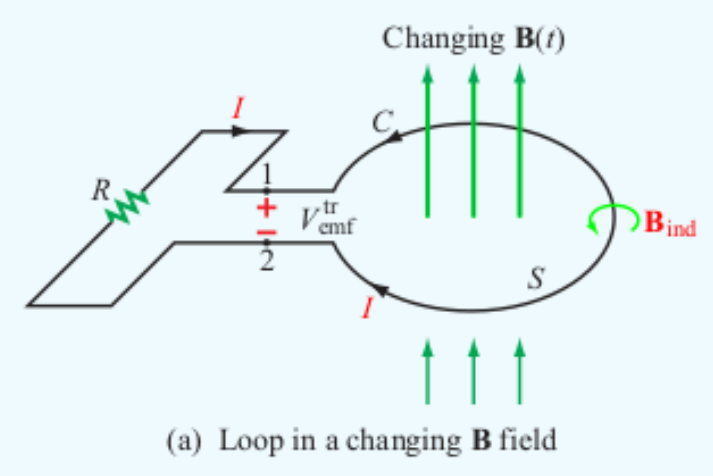

$$V_{\text{emf}}^{\text{tr}} = \oint_C \mathbf{E} \cdot d\ell \tag{15}$$

(This is the integral form of the definition of the scalar potential V. See Sections 4-5.1 and 4-5.4.) Equating the two expressions for $V_{\text{emf}}^{\text{tr}}$, Faraday's law becomes

$$\oint_C \mathbf{E} \cdot d\ell = -\int_S \frac{\partial \mathbf{B}}{\partial t} \cdot d\mathbf{s}. \tag{16}$$

This is the **integral form of Faraday's law**.

Time-Varying Flux Through a Stationary Loop (Continued)

By Stoke's theorem,

$$\oint_C \mathbf{E} \cdot d\boldsymbol{\ell} = \int_S (\nabla \times \mathbf{E}) \cdot d\mathbf{s} \tag{17}$$

so that Faraday's law becomes

$$\int_S (\nabla \times \mathbf{E}) \cdot d\mathbf{s} = -\int_S \frac{\partial \mathbf{B}}{\partial t} \cdot d\mathbf{s}. \tag{18}$$

Since this is true for any loop (consisting of a single turn), i.e. for any S, the integrands must be the same, which means

$$\nabla \times \mathbf{E} = -\frac{\partial \mathbf{B}}{\partial t}. \tag{19}$$

This is the **differential form of Faraday's law**.

Time-Varying Flux Through a Stationary Loop (Continued)

Example: Inductor in a Changing Magnetic Field

Here, there are N circular turns centered on the origin with radius a lying in the x-y plane connected to a resistor R and

$$\mathbf{B} = B_0 \sin(\omega t)(2\hat{\mathbf{y}} + 3\hat{\mathbf{z}}), \qquad (20)$$

where $B_0, \omega > 0$.

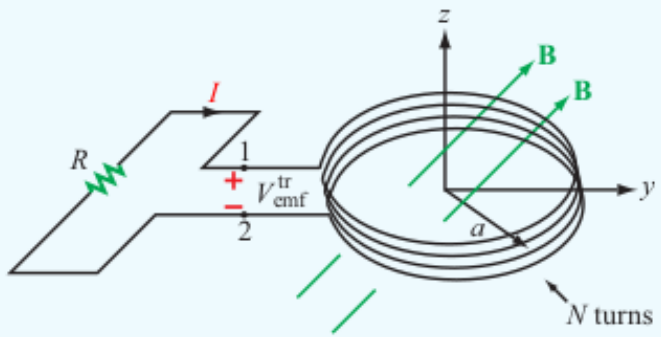

Figure 6-3 Circular loop with N turns in the x–y plane. The magnetic field is $\mathbf{B} = B_0(\hat{\mathbf{y}}2 + \hat{\mathbf{z}}3)\sin\omega t$ (Example 6-1).

Find

1. The magnetic flux through a single turn of the inductor.
2. $V_{\text{emf}}^{\text{tr}}$ when $N = 10$, $B_0 = 0.2$ T, $a = 10$ cm, and $\omega = 10^3$ rad/s.
3. The polarity of $V_{\text{emf}}^{\text{tr}}$ at $t = 0$.
4. The induced current I when $R = 1$ kΩ and $R_i \ll R$.

Time-Varying Flux Through a Stationary Loop (Continued)

1. **Find the magnetic flux through a single turn of the inductor.**

   Choose $d\mathbf{s}$ to point in the direction of $\hat{\mathbf{z}}$. Then the flux through a single turn is

$$\begin{aligned}\Phi(t) &= \int_S \mathbf{B} \cdot d\mathbf{s} = \int_S (B_0 \sin(\omega t)(2\hat{\mathbf{y}} + 3\hat{\mathbf{z}})) \cdot (\hat{\mathbf{z}} ds) \\ &= 3B_0 \sin(\omega t) \int_S ds = 3\pi a^2 B_0 \sin(\omega t). \end{aligned} \tag{21}$$

2. **Find $V_{\text{emf}}^{\text{tr}}$ for $N = 10$, $B_0 = 0.2$ T, $a = 10$ cm, and $\omega = 10^3$ rad/s.**

   Here,

$$\begin{aligned}V_{\text{emf}}^{\text{tr}} &= -N \frac{d\Phi}{dt} = -3N\pi a^2 B_0 \frac{d}{dt} \sin(\omega t) \\ &= -3N\pi a^2 B_0 \, \omega \cos(\omega t). \end{aligned} \tag{22}$$

Time-Varying Flux Through a Stationary Loop (Continued)

Since the contour C is counterclockwise when looking down at the inductor, this means that

$$V_1 - V_2 = V_{\text{emf}}^{\text{tr}} = -3N\pi a^2 B_0\,\omega\cos(\omega t). \tag{23}$$

Using the values given,

$$\begin{aligned} V_{\text{emf}}^{\text{tr}} &= -3(10)(\pi\ \text{rad})(0.1\ \text{m})^2(0.2\ \text{T})(10^3\ \text{rad/s})\cos\left(10^3 t\right) \\ &= -188.5\ \cos\left(10^3 t\right)\ \ (\text{Tm}^2/s) \\ &= -188.5\ \cos\left(10^3 t\right)\ \ ((\text{V}\,s/\text{m}^2)\,\text{m}^2/s) \\ &= -188.5\ \cos\left(10^3 t\right)\ \ \text{V}. \end{aligned} \tag{24}$$

Note that the value of ω tells us that the unit of time is seconds.

Time-Varying Flux Through a Stationary Loop (Continued)

3. **Find the polarity of $V_{\mathbf{emf}}^{\mathbf{tr}}$ at $t = 0$.**

   It is necessary to find the direction of the induced flux Φ_{ind} to answer this question. Note that the flux $\Phi(t)$ for the magentic field $\mathbf{B}(t)$ is in the $\hat{\mathbf{z}}$ direction since that was the direction chosen for $d\mathbf{s}$.

   The change in the flux at $t = 0$ is

$$\left.\frac{d\Phi}{dt}\right|_{t=0} = 3\pi a^2 B_0\,\omega\cos(\omega t)\Big|_{t=0} = 3\pi a^2 B_0\,\omega > 0. \tag{25}$$

   By Lenz's law, the induced flux inside the loop is in the opposite direction, which means that it is in the $-\hat{\mathbf{z}}$ direction and the induced magnetic field $\mathbf{B}_{\text{ind}}$ points in that direction. So, the current I flows in the direction shown in the figure at $t = 0$.

Time-Varying Flux Through a Stationary Loop (Continued)

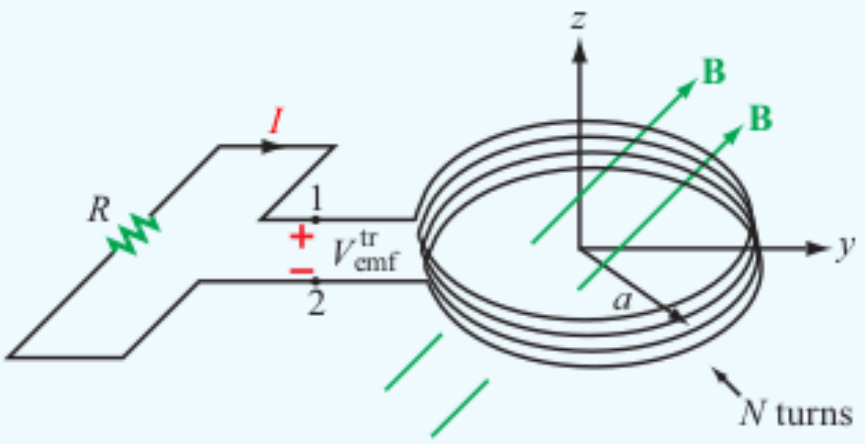

Figure 6-3 Circular loop with N turns in the x–y plane. The magnetic field is $\mathbf{B} = B_0(\hat{\mathbf{y}}2 + \hat{\mathbf{z}}3)\sin\omega t$ (Example 6-1).

Since current flows from a positive contact point to a negative contact point, the voltage between points 1 and 2 at $t = 0$ must be negative, i.e.

$$V_{emf}^{tr} = V_1 - V_2 = -188.5 \text{ V}, \tag{26}$$

which is consistent with the expression found in Part 2.

Time-Varying Flux Through a Stationary Loop (Continued)

4. **Find the induced current I when $R = 1$ kΩ and $R_i \ll R$.**

   Since the current flows from point 2 to point 1, it is

$$I = \frac{V_2 - V_1}{R} = \frac{188.5 \cos\left(10^3 t\right) \text{ V}}{1000 \ \Omega} = 0.19 \cos\left(10^3 t\right) \text{ A}. \tag{27}$$

The Ideal Transformer

An **ideal transformer** has 2 coils wrapped around opposite sides of a magnetic core with $\mu = \infty$. Coil 1 is the **primary coil** with N_1 turns and an ac voltage source $V_1(t)$ that creates a current I_1. The current generates a magnetic flux Φ in the core. Since $\mu = \infty$, all of the flux is confined to the core.

Coil 2 is the **secondary coil** with N_2 turns and is connected to a load R_L.

Note that the flux through Coil 2 will be the opposite of the flux through Coil 1 and I_2 will flow in the direction determined by the flux and how Coil 2 is wound.

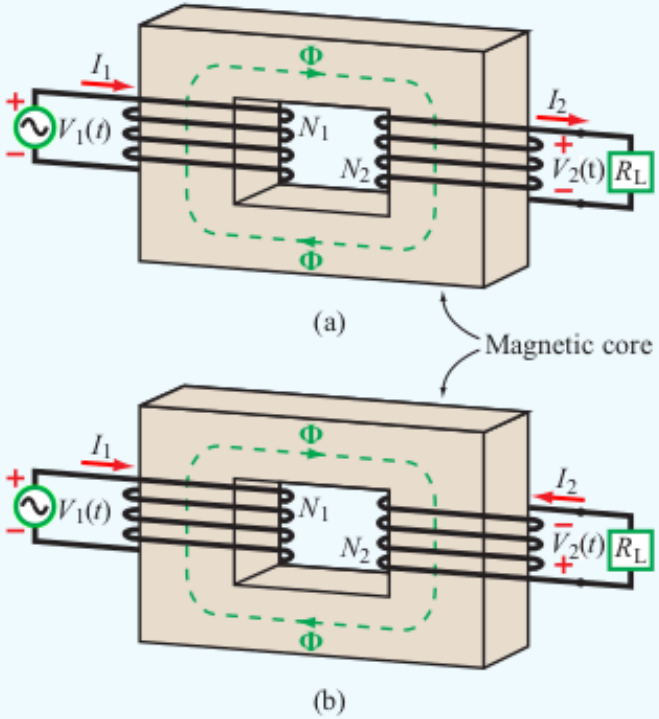

Figure 6-5 In a transformer, the directions of I_1 and I_2 are such that the flux Φ generated by one of them is opposite to that generated by the other. The direction of the secondary winding in (b) is opposite to that in (a), and so are the direction of I_2 and the polarity of V_2.

The Ideal Transformer (Continued)

By Faraday's law,

$$V_1(t) = -N_1 \frac{d\Phi}{dt} \quad \text{and} \quad V_2(t) = -N_2 \frac{d\Phi}{dt}. \tag{28}$$

Dividing these two equations shows that

$$\frac{V_1(t)}{V_2(t)} = \frac{N_1}{N_2}. \tag{29}$$

Furthermore, no power is lost in an ideal transformer, which means that the power in both coils is the same, and

$$I_1 V_1 = P_1 = P_2 = I_2 V_2. \tag{30}$$

Therefore,

$$\frac{I_1}{I_2} = \frac{V_2}{V_1} = \frac{N_2}{N_1}. \tag{31}$$

The Ideal Transformer (Continued)

The transformer can be represented as an equivalent circuit pertaining to the primary coil.

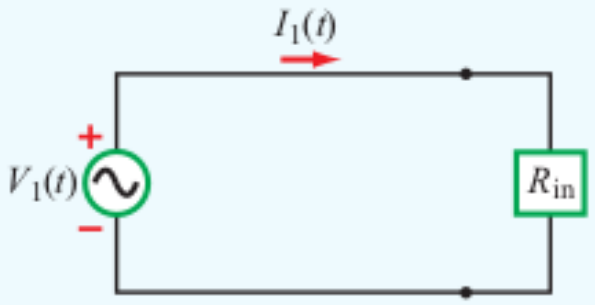

Figure 6-6 Equivalent circuit for the primary side of the transformer.

The resistance R_{in} is the load on the primary coil. By Ohm's law and using the equations found above,

$$R_{in} = \frac{V_1}{I_1} = \frac{\left(\frac{N_1}{N_2} V_2\right)}{\left(\frac{N_2}{N_1} I_2\right)} = \left(\frac{N_1}{N_2}\right)^2 \frac{V_2}{I_2} = \left(\frac{N_1}{N_2}\right)^2 R_L. \tag{32}$$

The Ideal Transformer (Continued)

So, in the phasor domain,

$$Z_{\text{in}} = \left(\frac{N_1}{N_2}\right)^2 Z_{\text{L}}, \tag{33}$$

where Z_{in} and Z_{L} are the impedances associated with R_{in} and R_{L}, respectively. These can be used to analyze the behavior of the transformer when $V_1(t)$ is sinusoidal (or a superposition of sinusoids).

See the Feynman Lectures on Physics, Volume II, Chapter 16, Section 2 for a qualitative discussion about transformers.

Moving Conductor in a Static Magnetic Field

This is the 2nd case associated with Faraday's law.

It's possible to characterize this situation by considering what happens when a conducting wire moves through a static magnetic field.

Here, the wire has length ℓ and constant velocity $\mathbf{u} = u\hat{\mathbf{x}}$. The magnetic field is $\mathbf{B} = B_0\hat{\mathbf{z}}$.

A charge q in the wire experiences the force

$$\mathbf{F}_{\text{m}} = q(\mathbf{u} \times \mathbf{B}) \tag{34}$$

due to the magnetic field.

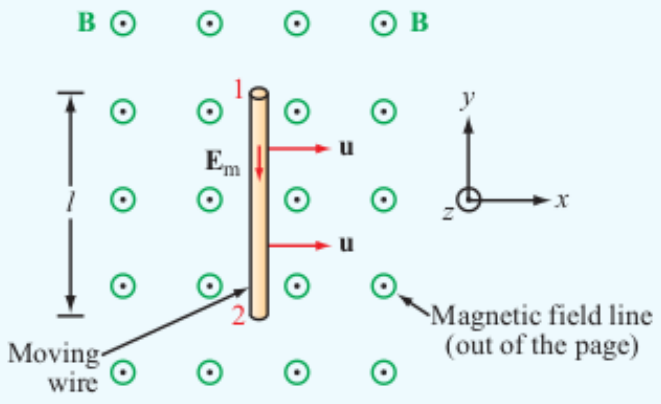

Figure 6-7 Conducting wire moving with velocity **u** in a static magnetic field.

The **motional electric field** that would exert the same force on q is

$$\mathbf{E}_{\text{m}} = \mathbf{F}_m/q = \mathbf{u} \times \mathbf{B}, \tag{35}$$

which is perpendicular to $\mathbf{u}$ and $\mathbf{B}$ and, according to the right-hand rule, points in the $-\hat{\mathbf{y}}$ direction.

Moving Conductor in a Static Magnetic Field (Continued)

Since the electrons in the wire are negatively charged and move freely, the magnetic field pushes them in the direction of $-(\mathbf{u} \times \mathbf{B})$, i.e. in the $\hat{\mathbf{y}}$ direction toward point 1, creating a **motional emf** $V_{\text{emf}}^{\text{m}}$ between the two ends of the wire.

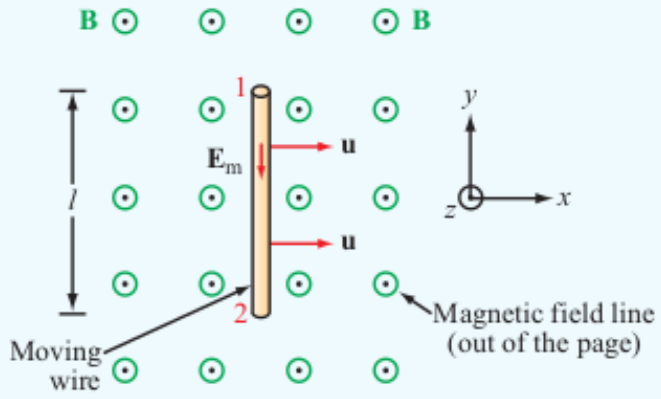

Figure 6-7 Conducting wire moving with velocity **u** in a static magnetic field.

In this case,

$$
\begin{aligned}
V_{\text{emf}}^{\text{m}} = V_{12} &= \int_2^1 \mathbf{E}_{\text{m}} \cdot d\boldsymbol{\ell} = \int_2^1 (\mathbf{u} \times \mathbf{B}) \cdot d\boldsymbol{\ell} \\
&= \int_2^1 (u\hat{\mathbf{x}} \times B_0\hat{\mathbf{z}}) \cdot (\hat{\mathbf{y}} d\ell) = \int_2^1 (-uB_0\hat{\mathbf{y}}) \cdot (\hat{\mathbf{y}} d\ell) \\
&= -uB_0 \int_2^1 d\ell = -uB_0\ell. \qquad (36)
\end{aligned}
$$

Moving Conductor in a Static Magnetic Field (Continued)

This is a special case of the general formula

$$V_{\text{emf}}^{\text{m}} = \oint_C (\mathbf{u} \times \mathbf{B}) \cdot d\ell, \tag{37}$$

where C is the contour of a closed circuit moving with velocity $\mathbf{u}$ through a static magnetic field $\mathbf{B}$. The integral is only evaluated along portions of the circuit that are moving and cross magnetic field lines.

Example: Sliding Bar

Here, the bar is oriented in the $\hat{\mathbf{y}}$ direction and moves with velocity $\mathbf{u}$

$$\mathbf{u} = u\hat{\mathbf{x}} \tag{38}$$

$$\mathbf{B} = B_0 x\hat{\mathbf{z}} \tag{39}$$

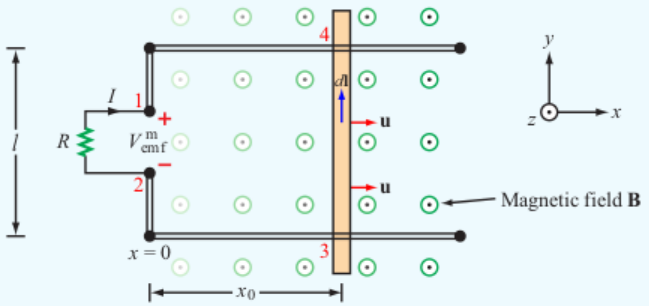

Figure 6-8 Sliding bar with velocity $\mathbf{u}$ in a magnetic field that increases linearly with x; that is, $\mathbf{B} = \hat{\mathbf{z}}B_0 x$ (Example 6-3).

The bar is located at $x = 0$ at time $t = 0$.

Find $V_{\text{emf}}^{\text{m}}$ between points 1, 2 and the current I through R.

Moving Conductor in a Static Magnetic Field (Continued)

Only the bar is moving and crosses the magnetic field. So, the motional emf at a particular value x_0 of x is

$$V_{\text{emf}}^{\text{m}} = V_{12} = V_{43} = \int_3^4 (\mathbf{u} \times \mathbf{B}) \cdot d\boldsymbol{\ell} = \int_3^4 (u\hat{\mathbf{x}} \times B_0 x_0 \hat{\mathbf{z}}) \cdot (\hat{\mathbf{y}} d\ell)$$
$$= \int_3^4 (-uB_0 x_0 \hat{\mathbf{y}}) \cdot (\hat{\mathbf{y}} d\ell) = -uB_0 x_0 \int_3^4 d\ell = -uB_0 x_0 \ell. \tag{40}$$

Since $x_0 = ut$,

$$V_{\text{emf}}^{\text{m}} = -B_0 \ell u^2 t. \tag{41}$$

As a sanity check, consider the units of $V_{\text{emf}}^{\text{m}}$, assuming SI units for all quantities. The units of $\mathbf{B} = B_0 x \hat{\mathbf{z}}$ are Teslas and the units of x are meters, which means that the units of B_0 are T/m. So, the units of $V_{\text{emf}}^{\text{m}}$ are

$$(\text{T/m})(\text{m})(\text{m}^2/\text{s}^2)(\text{s}) = \frac{\text{T m}^2}{\text{s}} = \text{V}, \tag{42}$$

as they should be.

Moving Conductor in a Static Magnetic Field (Continued)

Since $V_{\text{emf}}^{\text{tr}} = 0$, $V_{\text{emf}}^{\text{m}}$ can also be calculated by using Faraday's law to determine the total emf. Let the direction of $d\mathbf{s}$ be $\hat{\mathbf{z}}$. Then the flux through the loop when $x = x_0$ is

$$\begin{aligned}\Phi &= \int_S \mathbf{B} \cdot d\mathbf{s} = \int_S (B_0 x \hat{\mathbf{z}}) \cdot (\hat{\mathbf{z}} dx\, dy) = B_0 \int_3^4 \int_0^{x_0} x\, dx\, dy \\ &= B_0 \ell \int_0^{x_0} x\, dx = \frac{1}{2} B_0 \ell x_0^2. \end{aligned} \tag{43}$$

As before, $x_0 = ut$ so $\Phi = \frac{1}{2} B_0 \ell u^2 t^2$ and

$$V_{\text{emf}}^{\text{m}} = V_{\text{emf}} = -\frac{d\Phi}{dt} = -\frac{d}{dt}\left(\frac{1}{2} B_0 \ell u^2 t^2\right) = -B_0 \ell u^2 t, \tag{44}$$

as shown previously.

Moving Conductor in a Static Magnetic Field (Continued)

Finally, Ohm's law implies

$$I = \frac{V_{21}}{R} = \frac{B_0 \ell u^2 t}{R} \tag{45}$$

and the fact that $V_{12} < 0$ implies that the current flows in the direction from point 2 to point 1.

Homework

Read Chapter 6.