# ECE 332: Engineering Electromagnetics II

## Lecture 3

Mark A. Martin

Portland State University

April 7, 2026

# Quick Review

- The **magnetic flux** through a conducting loop with surface area $S$ (in the direction of $d\mathbf{s}$) due to a magnetic field $\mathbf{B}$ is

$$\Phi = \int_S \mathbf{B} \cdot d\mathbf{s}. \tag{1}$$

- A **change in the flux** through the loop **electromagnetically induces** a current in the loop.
- **Faraday's law** determines the **electromotive force (emf)**

$$V_{\text{emf}} = -N\frac{d\Phi}{dt} = -N\frac{d}{dt}\int_S \mathbf{B} \cdot d\mathbf{s} \tag{2}$$

  that the magnetic field $\mathbf{B}$ **induces** in a conducting loop with $N$ turns.
- A **right-hand rule** specifies the (reference) polarity of $V_{\text{emf}}$ and the direction of the contour $C$ based on the direction of $d\mathbf{s}$.

# Quick Review (Continued)

- **Lenz's law** says that the induced current $I$ and the polarity of $V_{\text{emf}}$ will oppose the change in magnetic flux $\Phi$. This determines the direction of the magnetic field $\mathbf{B}_{\text{ind}}$ associated with the induced current inside the loop.
  - $\mathbf{B}$ is increasing inside the loop $\implies$ $\mathbf{B}_{\text{ind}}$ points in the opposite direction from $\mathbf{B}$ inside the loop.
  - $\mathbf{B}$ is decreasing inside the loop $\implies$ $\mathbf{B}_{\text{ind}}$ points in the same direction as $\mathbf{B}$ inside the loop.
- The direction of $\mathbf{B}_{\text{ind}}$ determines the direction of the induced current $I$ via the right-hand rule that specifies the relationship between a current and the associated magnetic field.

# Quick Review (Continued)

- There are **3 cases** to consider.
  1. Time-varying flux through a stationary loop: $V_{\text{emf}}$ is the **transformer emf** $V_{\text{emf}}^{\text{tr}}$.
  2. A loop moves in a stationary magnetic field: $V_{\text{emf}}$ is the **motional emf** $V_{\text{emf}}^{\text{m}}$.
  3. A loop moves in a time-varying flux: $V_{\text{emf}} = V_{\text{emf}}^{\text{tr}} + V_{\text{emf}}^{\text{m}}$.

1. **When the loop is stationary and the magnetic field B changes**,

$$V_{\text{emf}} = V_{\text{emf}}^{\text{tr}} = -N \int_S \frac{\partial \mathbf{B}}{\partial t} \cdot d\mathbf{s}. \qquad (3)$$

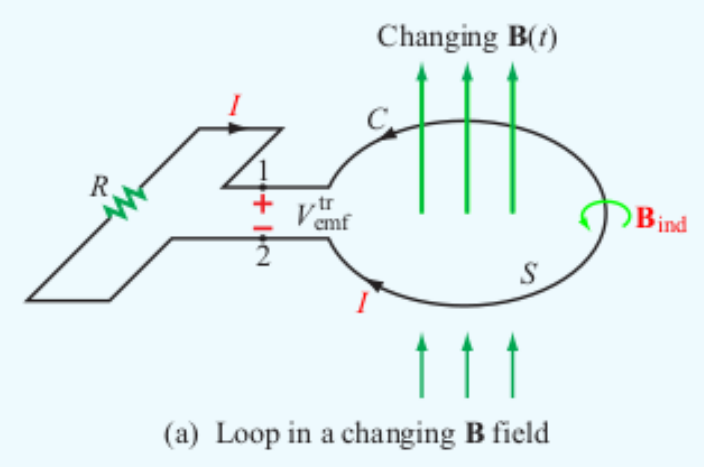

(a) Loop in a changing **B** field

# Quick Review (Continued)

- If $R_i$ is the resistance of the loop and $R$ is the load on the circuit, the equivalent circuit satisfies

$$I = \frac{V_{\text{emf}}^{\text{tr}}}{R + R_i} \approx \frac{V_{\text{emf}}^{\text{tr}}}{R} \tag{4}$$

since, typically, $R_i \ll R$.

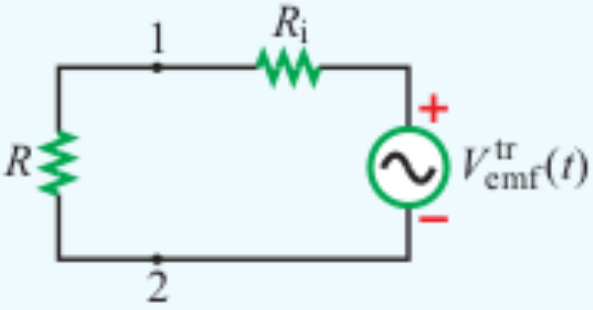

(b) Equivalent circuit

# Quick Review (Continued)

- The relationship between the electric field **E** associated with the induced current and the external magnetic field **B** is the **integral form of Faraday's law**

$$\oint_C \mathbf{E} \cdot d\ell = -\int_S \frac{\partial \mathbf{B}}{\partial t} \cdot d\mathbf{s}. \tag{5}$$

- Stoke's theorem and the fact that the resulting equation must be true for any loop implies

$$\nabla \times \mathbf{E} = -\frac{\partial \mathbf{B}}{\partial t}, \tag{6}$$

  which is the **differential form of Faraday's law**.

- We explored **a simple example** of an inductor in a changing magnetic field.

# Quick Review (Continued)

- For an **ideal transformer** that has a **primary coil** with $N_1$ turns and an ac voltage source $V_1(t)$ that creates a current $I_1$ and a **secondary coil** with $N_2$ turns, voltage $V_2$, current $I_2$, and a load $R_L$,

$$\frac{V_1}{V_2} = \frac{N_1}{N_2} \quad \text{and} \quad \frac{I_1}{I_2} = \frac{N_2}{N_1}. \tag{7}$$

The **load on the primary coil** $R_{in}$ is related to the **load on the secondary coil** $R_L$ by

$$R_{in} = \left(\frac{N_1}{N_2}\right)^2 R_L, \quad Z_{in} = \left(\frac{N_1}{N_2}\right)^2 Z_L. \tag{8}$$

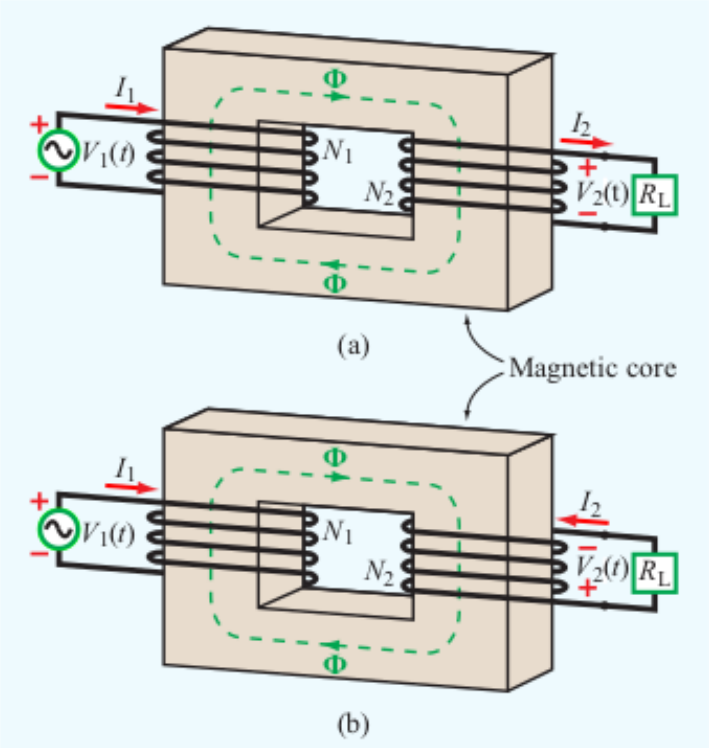


**Figure 6-5** In a transformer, the directions of $I_1$ and $I_2$ are such that the flux $\Phi$ generated by one of them is opposite to that generated by the other. The direction of the secondary winding in (b) is opposite to that in (a), and so are the direction of $I_2$ and the polarity of $V_2$.

# Quick Review (Continued)

2. **When a closed circuit with contour $C$ moves with velocity $\mathbf{u}$ through a static magnetic field $\mathbf{B}$**, then the **motional emf** is

$$V_{\text{emf}}^{\text{m}} = \oint_C (\mathbf{u} \times \mathbf{B}) \cdot d\ell. \tag{9}$$

   The integral is only evaluated along portions of the circuit that are moving and cross magnetic field lines. More precisely, if either $\mathbf{u}$ or $\mathbf{B}$ is parallel to $d\ell$ for a part of the contour $C$, the integral will be 0 for that part of the contour.

- We explored an example of **a circuit containing a sliding bar**.

# Moving Conductor in a Static Magnetic Field (Continued)

**Example:** Moving Loop

A 0.5 m $\times$ 2.0 m rectangular loop in the $x$-$y$ plane moves at constant velocity

$$\mathbf{u} = (5 \text{ m/s})\hat{\mathbf{y}} \tag{10}$$

through a magnetic field

$$\mathbf{B} = (0.2\,\text{T})e^{-(0.1/\text{m})y}\hat{\mathbf{z}} \tag{11}$$

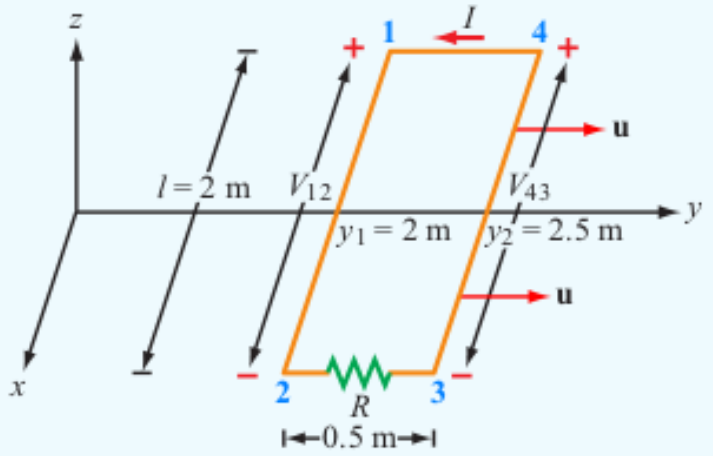


**Figure 6-9** Moving loop of Example 6-4.

Find the the current through the resistor $R = 5\ \Omega$ when $y_1 = 2$ m and $y_2 = 2.5$ m, assuming that $R_i \ll R$.

The portions of the circuit where currents will be induced are the sides that are perpendicular to the velocity $\mathbf{u}$, i.e. sides $1-2$ and $3-4$.

# Moving Conductor in a Static Magnetic Field (Continued)

The induced voltage between points 2 and 1 is

$$\begin{aligned} V_{12} &= \int_2^1 (\mathbf{u} \times \mathbf{B}(y_1)) \cdot d\boldsymbol{\ell} = \int_{1\mathrm{m}}^{-1\mathrm{m}} ((5\,\mathrm{m/s})\hat{\mathbf{y}} \times (0.2\,\mathrm{T})e^{-0.2}\hat{\mathbf{z}}) \cdot (\hat{\mathbf{x}}dx) \\ &= (e^{-0.2}\ \mathrm{Tm/s}) \int_{1\mathrm{m}}^{-1\mathrm{m}} (\hat{\mathbf{x}}) \cdot (\hat{\mathbf{x}})\, dx = (e^{-0.2}\ \mathrm{Tm/s}) \int_{1\mathrm{m}}^{-1\mathrm{m}} dx \\ &= (e^{-0.2}\ \mathrm{Tm/s})\, x\Big|_{1\mathrm{m}}^{-1\mathrm{m}} = -2e^{-0.2}\ \mathrm{Tm^2/s} \\ &\approx -1.637\,\mathrm{V} \end{aligned} \tag{12}$$

and the induced voltage between points 4 and 3 is

$$\begin{aligned} V_{43} &= \int_4^3 (\mathbf{u} \times \mathbf{B}(y_2)) \cdot d\boldsymbol{\ell} = \int_{1\mathrm{m}}^{-1\mathrm{m}} ((5\,\mathrm{m/s})\hat{\mathbf{y}} \times (0.2\,\mathrm{T})e^{-0.25}\hat{\mathbf{z}}) \cdot (\hat{\mathbf{x}}dx) \\ &= \left(e^{-0.25}\ \mathrm{Tm/s}\right) \int_{1\mathrm{m}}^{-1\mathrm{m}} dx = -2e^{-0.25}\ \mathrm{V} \\ &\approx -1.558\,\mathrm{V}. \end{aligned} \tag{13}$$

# Moving Conductor in a Static Magnetic Field (Continued)

So, the current flows from point 3 to point 4 and from point 1 to point 2, which is the direction shown.

Furthermore, the current through $R$ is

$$I = \frac{V_{43} - V_{12}}{R} \approx \frac{0.080 \text{ V}}{5\Omega} = 15.8 \text{ mA}. \tag{14}$$

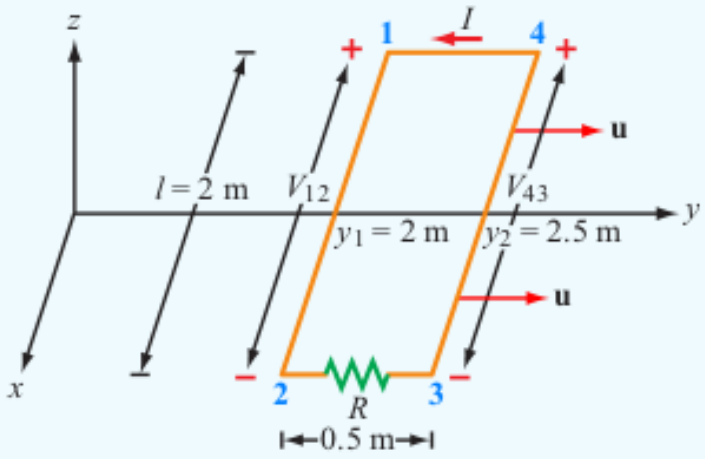


**Figure 6-9** Moving loop of Example 6-4.

Recall that, in general,

$$V_{\text{emf}}^{\text{m}} = \oint_C (\mathbf{u} \times \mathbf{B}) \cdot d\ell \tag{15}$$

and suppose you thought that there might be a potential difference between points 1 and 4.

# Moving Conductor in a Static Magnetic Field (Continued)

In this case,

$$
\begin{aligned}
V_{14} &= \int_1^4 (\mathbf{u} \times \mathbf{B}(y)) \cdot d\ell = \int_{2\,\mathrm{m}}^{2.5\,\mathrm{m}} ((5\,\mathrm{m/s})\hat{\mathbf{y}} \times (0.2\,\mathrm{T})e^{-(0.1/\mathrm{m})y}\hat{\mathbf{z}}) \cdot (\hat{\mathbf{y}}dy) \\
&= (\mathrm{Tm/s}) \int_{2\,\mathrm{m}}^{2.5\,\mathrm{m}} e^{-(0.1/\mathrm{m})y} (\hat{\mathbf{y}} \times \hat{\mathbf{z}}) \cdot (\hat{\mathbf{y}}dy) \\
&= (\mathrm{Tm/s}) \int_{2\,\mathrm{m}}^{2.5\,\mathrm{m}} e^{-(0.1/\mathrm{m})y} (\hat{\mathbf{x}} \cdot \hat{\mathbf{y}})\, dy \\
&= 0 \text{ V}.
\end{aligned} \tag{16}
$$

The reason $V_{14} = 0$ is that the velocity and this portion of the loop are parallel. Similarly, $V_{32} = 0$ V.

# Electromagnetic Motors and Generators

**Electromagnetic motors** and **generators** are essentially the **same device**. The figure shows the simplest motor on top and the simplest generator on the bottom. Both devices contain conducting loops that rotate in an external magnetic field.

**In a motor**, an ac voltage is applied to the loop and the difference in direction of the currents through sides $1-2$ and $3-4$ creates forces that push the sides in opposite directions. This creates a torque on the loop that causes it to rotate about it's center, which is drawn as a dashed line in the figure.

**In a generator**, a mechanical torque rotates the loop and creates a potential difference between the two sides.

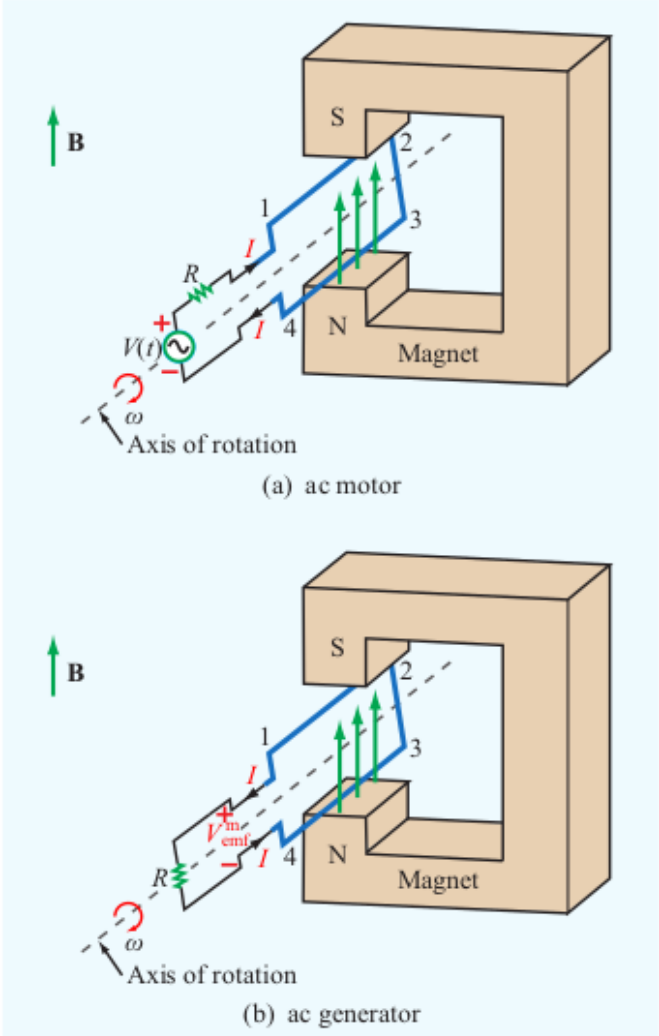


**Figure 6-11** Principles of the ac motor and the ac generator. In (a) the magnetic torque on the wires causes the loop to rotate, and in (b) the rotating loop generates an emf.

# Electromagnetic Motors and Generators (Continued)

So, both devices are **transducers** – a motor converts electromagnetic energy into mechanical energy and a generator converts mechanical energy into electromagnetic energy.

Consider a rectangular loop with its central axis lying on the $x$-axis and the origin at the center of the loop. Let $\ell$ be the length of sides $1-2$ and $3-4$ and let $w$ be the length of side $2-3$. Suppose that the magnetic field is constant and points in the $z$-direction so that

$$\mathbf{B} = B_0\hat{\mathbf{z}}. \tag{17}$$

Also, suppose that the loop rotates with angular velocity $\omega$ around its axis in the direction shown.

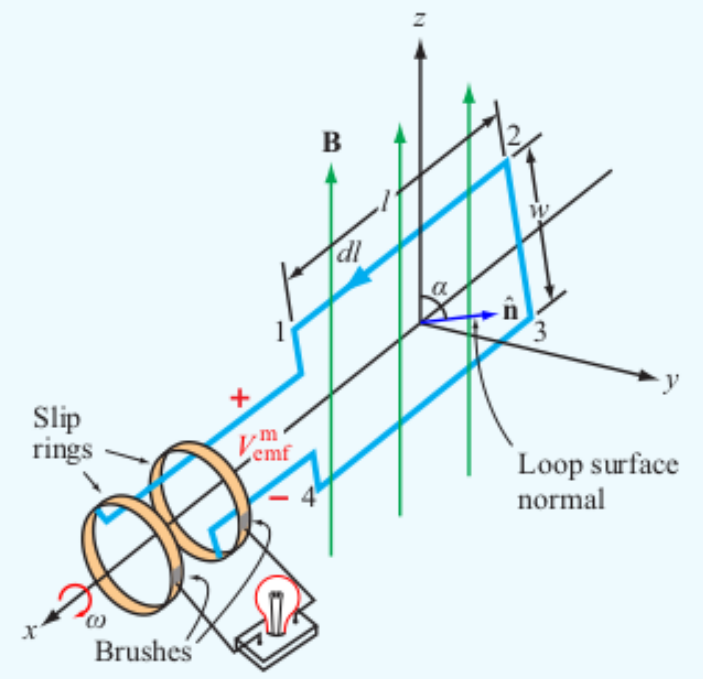


**Figure 6-12** A loop rotating in a magnetic field induces an emf.

# Electromagnetic Motors and Generators (Continued)

If $\hat{\mathbf{n}}$ is the unit normal to the surface of the loop that's shown, then the contour $C$ passes through the points in the order 4, 3, 2, 1. Also, the velocity of side 1 – 2 is

$$\mathbf{u} = \omega \frac{w}{2} \hat{\mathbf{n}} \tag{18}$$

and the velocity of side 3 – 4 is $\mathbf{u} = -\omega w/2\hat{\mathbf{n}}$.

What would happen if the other normal $\hat{\mathbf{n}}' = -\hat{\mathbf{n}}$ was chosen instead?

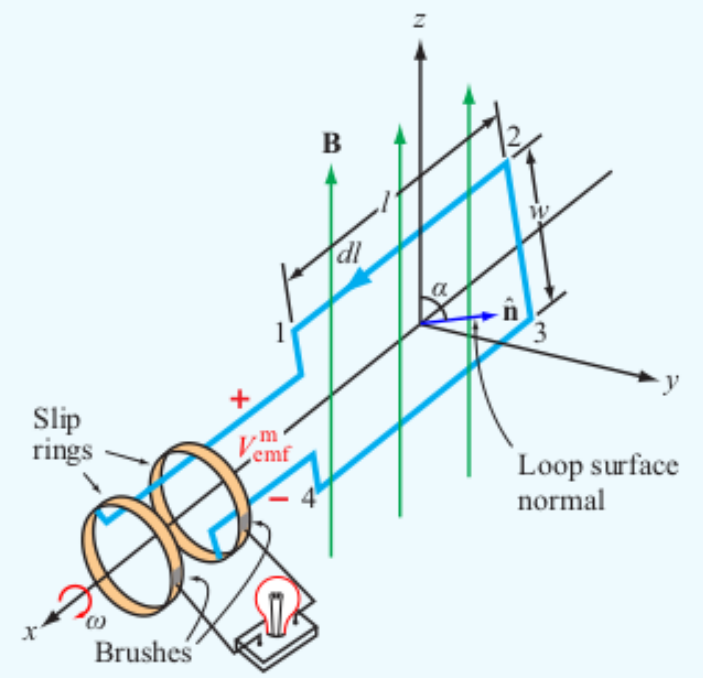


**Figure 6-12** A loop rotating in a magnetic field induces an emf.

Then the contour would pass through the points in the order 1, 2, 3, 4, the velocity of side 3 – 4 would be $\mathbf{u}' = \omega w/2\hat{\mathbf{n}}'$, and the velocity of side 1 – 2 would be $-\mathbf{u}'$.

# Electromagnetic Motors and Generators (Continued)

Using the normal $\hat{\mathbf{n}}$,

$$\begin{aligned}
V_{\text{emf}}^{\text{m}} &= \oint_C (\mathbf{u} \times \mathbf{B}) \cdot d\boldsymbol{\ell} = \int_4^3 (\mathbf{u} \times \mathbf{B}) \cdot d\boldsymbol{\ell} + \int_2^1 (\mathbf{u} \times \mathbf{B}) \cdot d\boldsymbol{\ell} \\
&= \int_{\ell/2}^{-\ell/2} \left( -\omega \frac{w}{2} \hat{\mathbf{n}} \times B_0 \hat{\mathbf{z}} \right) \cdot (\hat{\mathbf{x}} dx) + \int_{-\ell/2}^{\ell/2} \left( \omega \frac{w}{2} \hat{\mathbf{n}} \times B_0 \hat{\mathbf{z}} \right) \cdot (\hat{\mathbf{x}} dx) \\
&= \omega B_0 \frac{w}{2} \left( \int_{-\ell/2}^{\ell/2} (\hat{\mathbf{n}} \times \hat{\mathbf{z}}) \cdot (\hat{\mathbf{x}} dx) + \int_{-\ell/2}^{\ell/2} (\hat{\mathbf{n}} \times \hat{\mathbf{z}}) \cdot (\hat{\mathbf{x}} dx) \right) \\
&= \omega B_0 w \int_{-\ell/2}^{\ell/2} (\hat{\mathbf{n}} \times \hat{\mathbf{z}}) \cdot (\hat{\mathbf{x}} dx). \qquad (19)
\end{aligned}$$

Let $\alpha$ be the angle between the positive $z$ axis and the normal $\hat{\mathbf{n}}$. Then

$$\hat{\mathbf{n}} \times \hat{\mathbf{z}} = \sin \alpha \hat{\mathbf{x}} \qquad (20)$$

and

$$V_{\text{emf}}^{\text{m}} = \omega B_0 w \sin \alpha \int_{-\ell/2}^{\ell/2} dx = \ell w \omega B_0 \sin \alpha. \qquad (21)$$

# Electromagnetic Motors and Generators (Continued)

Here, $A = \ell w$ is the area of the loop and

$$\alpha = \omega t + C_0, \tag{22}$$

where $C_0$ is the value of $\alpha$ at time 0. So, altogether,

$$V_{\text{emf}}^{\text{m}} = A\omega B_0 \sin(\omega t + C_0). \tag{23}$$

As a sanity check, suppose that all quantities have SI units. The, the unit of $A$ is $\text{m}^2$, the unit of $\omega$ is rad/s, and the unit of $B_0$ is T. So, the unit of $V_{\text{emf}}^{\text{m}}$ is

$$\left(\text{m}^2\right)\left(\frac{\text{rad}}{\text{s}}\right)(\text{T}) = \frac{\text{T}\,\text{m}^2}{\text{s}} = \text{V}, \tag{24}$$

as expected.

It's also possible to calculate $V_{\text{emf}}^{\text{m}}$ using Faraday's law.

# Electromagnetic Motors and Generators (Continued)

First, the flux through the surface in the direction of $\hat{\mathbf{n}}$ is

$$\Phi = \int_S \mathbf{B} \cdot d\mathbf{s} = \int_S B_0 \hat{\mathbf{z}} \cdot \hat{\mathbf{n}} ds = B_0 \cos\alpha \int_S ds = AB_0 \cos(\omega t + C_0). \quad (25)$$

So,

$$V_{\text{emf}}^{\text{m}} = V_{\text{emf}} = -\frac{d\Phi}{dt} = A\omega B_0 \sin(\omega t + C_0), \quad (26)$$

which is the same expression obtained before.

Suppose you wanted to increase $V_{\text{emf}}^{\text{m}}$. How could you do this?

- Increase the area of the loop.
- Increase the angular velocity.
- Increase the magnetic field.

Suppose you have a fixed mechanical energy source. Which of these would be possible? Any of them might be possible. Are there any tradeoffs?

# Moving Loop in a Time-Varying Magnetic Field

The 3rd (and last) case to consider when applying Faraday's law is the case in which the loop is allowed to move and the magnetic field is allowed to change. In this case, the total emf is due to both a transformer emf and a motional emf, i.e.

$$V_{\text{emf}} = V_{\text{emf}}^{\text{tr}} + V_{\text{emf}}^{\text{m}} = -\int_S \frac{\partial \mathbf{B}}{\partial t} \cdot d\mathbf{s} + \oint_C (\mathbf{u} \times \mathbf{B}) \cdot d\ell. \tag{27}$$

As seen in several examples above, the total emf can also be calculated using Faraday's law. This is just the general expression for Faraday's law.

$$V_{\text{emf}} = -\frac{d\Phi}{dt} = -\frac{d}{dt}\int_S \mathbf{B} \cdot d\mathbf{s} \tag{28}$$

It turns out that these expressions are mathematically equivalent in this context and either one can be used, depending on which is easier to apply.

# Moving Loop in a Time-Varying Magnetic Field (Continued)

**Example: Generator with Sinusoidally Varying Magnetic Field**

Consider the electromagnetic generator with $\alpha = 0$ at $t = 0$ and

$$\mathbf{B} = B_0 \cos(\omega t)\hat{\mathbf{z}}. \tag{29}$$

In this case, the magnetic flux in the direction of $\hat{\mathbf{n}}$ is

$$\begin{aligned}\Phi &= \int_S \mathbf{B} \cdot d\mathbf{s} = \int_S B_0 \cos(\omega t)\hat{\mathbf{z}} \cdot \hat{\mathbf{n}} ds = B_0 \cos^2(\omega t) \int_S ds \\ &= AB_0 \cos^2(\omega t).\end{aligned} \tag{30}$$

So,

$$\begin{aligned}V_{\text{emf}} &= -\frac{d\Phi}{dt} = -\frac{d}{dt} AB_0 \cos^2(\omega t) = 2A\omega B_0 \cos(\omega t)\sin(\omega t) \\ &= A\omega B_0 \sin(2\omega t).\end{aligned} \tag{31}$$

# Ampère's Law and the Displacement Current

Up to this point, we have only considered applications of Faraday's law. Now we'll consider the consequences of another one of Maxwell's equations, specifically **Ampère's law**

$$\nabla \times \mathbf{H} = \mathbf{J} + \frac{\partial \mathbf{D}}{\partial t}. \tag{32}$$

Integrating both sides over any open surface $S$ with boundary contour $C$ and applying Stoke's theorem shows

$$\oint_C \mathbf{H} \cdot d\boldsymbol{\ell} = \int_S (\nabla \times \mathbf{H}) \cdot d\mathbf{s} = \int_S \mathbf{J} \cdot d\mathbf{s} + \int_S \frac{\partial \mathbf{D}}{\partial t} \cdot d\mathbf{s} = I_c + \int_S \frac{\partial \mathbf{D}}{\partial t} \cdot d\mathbf{s}, \tag{33}$$

where

$$I_c = \int_S \mathbf{J} \cdot d\mathbf{s} \tag{34}$$

is the **conduction current** flowing through the surface $S$.

# Ampère's Law and the Displacement Current (Continued)

The equation

$$\oint_C \mathbf{H} \cdot d\ell = I_c + \int_S \frac{\partial \mathbf{D}}{\partial t} \cdot d\mathbf{s} \tag{35}$$

is the **integral form of Ampère's law**. The time-derivative of the electric flux density

$$\mathbf{J}_d = \frac{\partial \mathbf{D}}{\partial t} \tag{36}$$

has the same units as the current density $\mathbf{J}$ and is called the **displacement current density**. The corresponding current

$$I_d = \int_S \mathbf{J}_d \cdot d\mathbf{s} = \int_S \frac{\partial \mathbf{D}}{\partial t} \cdot d\mathbf{s} \tag{37}$$

is called the **displacement current** through the surface $S$. The **total current** through $S$ is

$$I = I_c + I_d = \oint_C \mathbf{H} \cdot d\ell. \tag{38}$$

**Example: The Parallel-Plate Capacitor**

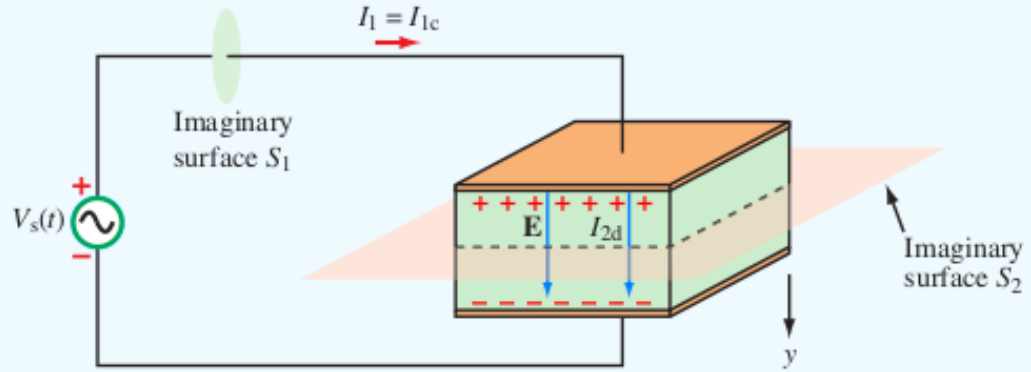


**Figure 6-13** The displacement current $I_{2d}$ in the insulating material of the capacitor is equal to the conducting current $I_{1c}$ in the wire.

Consider the parallel-plate capacitor with capacitance $C$ containing a perfect dielectric with permittivity $\epsilon$ driven by an ac voltage source

$$V_s(t) = V_0 \cos \omega t \tag{39}$$

and the 2 surfaces, $S_1$ and $S_2$, as shown above. $S_1$ is a cross-section of the wire between the voltage source and the capacitor and $S_2$ is a cross-section of the dielectric portion of the capacitor.

# Ampère's Law and the Displacement Current (Continued)

Assuming that the wire conducts perfectly, $\mathbf{D} = \mathbf{E} = \mathbf{0}$ on $S_1$, which means that the displacement current on $S_1$ is

$$I_{1d} = \int_S \frac{\partial \mathbf{D}}{\partial t} \cdot d\mathbf{s} = 0. \tag{40}$$

So, the total current through $S_1$ depends on the voltage across the capacitor $V_C$ and is

$$I_{1c} = I = C\frac{dV_C}{dt} = C\frac{dV_s}{dt} = C\frac{d}{dt}V_0 \cos\omega t = -CV_0\omega \sin\omega t. \tag{41}$$

For a perfect dielectric, the conductivity $\sigma = 0$, which means that $I_{2c} = 0$. Also, a previous example (Example 4-14) showed that the electric field in the dielectric is

$$\mathbf{E} = \frac{V_C}{d}\hat{\mathbf{y}} = \left(\frac{V_0}{d}\cos\omega t\right)\hat{\mathbf{y}}, \tag{42}$$

where $d$ is the distance between the plates and $\hat{\mathbf{y}}$ is the normal to the higher potential plate that points to the lower potential plate.

# Ampère's Law and the Displacement Current (Continued)

Note that $\hat{\mathbf{y}}$ is also the normal to $S_2$. The total current through $S_2$ is then

$$\begin{aligned} I_{2d} = I &= \int_S \frac{\partial \mathbf{D}}{\partial t} \cdot d\mathbf{s} = \int_S \frac{\partial(\epsilon \mathbf{E})}{\partial t} \cdot d\mathbf{s} \\ &= \int_S \left( \frac{\partial}{\partial t} \left( \frac{\epsilon V_0}{d} \cos \omega t \right) \hat{\mathbf{y}} \right) \cdot (\hat{\mathbf{y}} ds) = -\frac{\epsilon V_0}{d} \omega \sin \omega t \int_S ds \\ &= -\frac{\epsilon A}{d} V_0 \omega \sin \omega t = -C V_0 \omega \sin \omega t, \end{aligned} \tag{43}$$

where $A$ is the cross-sectional area of the capacitor and the capacitance

$$C = \frac{\epsilon A}{d}, \tag{44}$$

as previously defined for the parallel-plate capacitor. The fact that $I_{2d} = I_{1c}$ means that **the current flow in the circuit is continuous**. Even though charges don't flow in $I_{2d}$, it contributes to the overall current just like the current associated with the current density $\mathbf{J}$.

# Ampère's Law and the Displacement Current (Continued)

**Example: A More Realistic Wire**

Consider a wire with conductivity $\sigma = 2 \times 10^7$ S/m, relative permittivity $\epsilon_r = 1$, and cross-sectional area $A$. If

$$I_c = 2 \sin \omega t \text{ (mA)} \tag{45}$$

with $\omega = 10^9$ rad/s, determine the displacement current $I_d$.

The electric field and current density in the wire are uniform and it is only necessary to consider their magnitudes $E$ and $J$, respectively. In this case,

$$I_c = JA = \sigma EA, \tag{46}$$

which means that

$$E = \frac{I_c}{\sigma A} = \frac{\left(2 \times 10^{-3} \text{ (A)}\right) \sin\left(\omega t\right)}{\left(2 \times 10^7 \text{ (S/m)}\right) A} = \frac{10^{-10} \text{ (Vm)}}{A} \sin\left(\omega t\right). \tag{47}$$

# Ampère's Law and the Displacement Current (Continued)

So, the displacement current is

$$
\begin{aligned}
I_d &= \int_S \frac{\partial \mathbf{D}}{\partial t} \cdot d\mathbf{s} = \int_S \frac{\partial(\epsilon E)}{\partial t}\, ds = \epsilon \frac{\partial E}{\partial t} \int_S ds \\
&= \epsilon A \frac{\partial}{\partial t}\left(\frac{10^{-10}\ (\mathrm{Vm})}{A} \sin(\omega t)\right) = \epsilon\omega \times 10^{-10} \cos(\omega t)\ (\mathrm{Vm}) \\
&= \left(8.85 \times 10^{-12}\ \mathrm{F/m}\right)\left(10^9\ \mathrm{rad/s}\right) \times 10^{-10} \cos(\omega t)\ (\mathrm{Vm}) \\
&= \left(0.885 \times 10^{-12}\right) \cos(\omega t)\ (\mathrm{VF/s}) = \left(0.885 \times 10^{-12}\right) \cos(\omega t)\ (\mathrm{C/s}) \\
&= \left(0.885 \times 10^{-12}\right) \cos(\omega t)\ (\mathrm{A}), \qquad (48)
\end{aligned}
$$

where $\epsilon = \epsilon_r \epsilon_0 = \epsilon_0$. Since $I_d \sim 10^{-9} I_c$, ignoring $I_d$ in the wire is a reasonable approximation.

# Homework

Read Chapter 6.