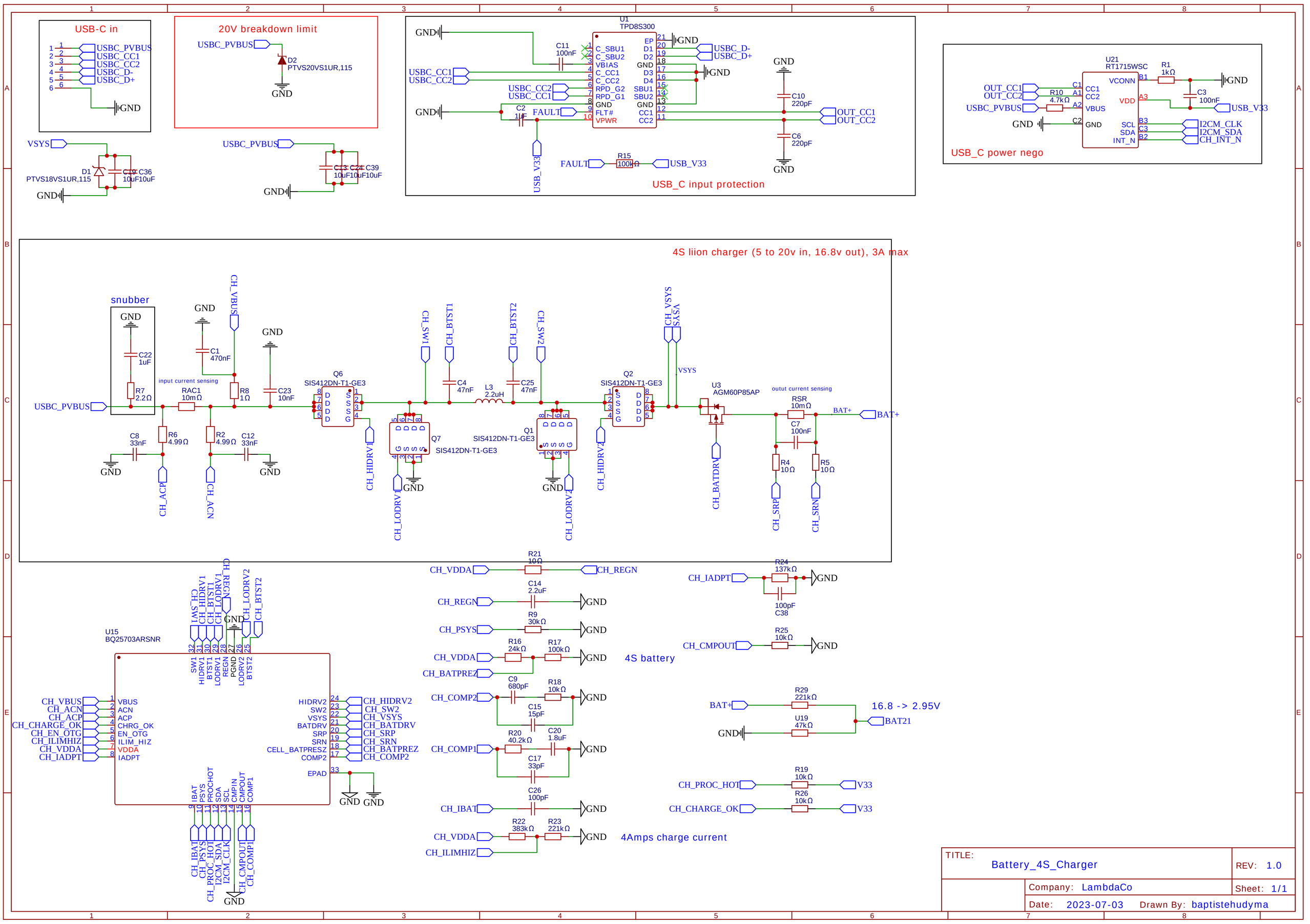
USB-C in
20V breakdown limit
USB_C input protection
USB_C power nego
4S liion charger (5 to 20v in, 16.8v out), 3A max
snubber
4S battery
4Amps charge current
16.8 -> 2.95V
TITLE: Battery_4S_Charger
REV: 1.0
Company: LambdaCo
Sheet: 1/1
Date: 2023-07-03
Drawn By: baptistehudyma

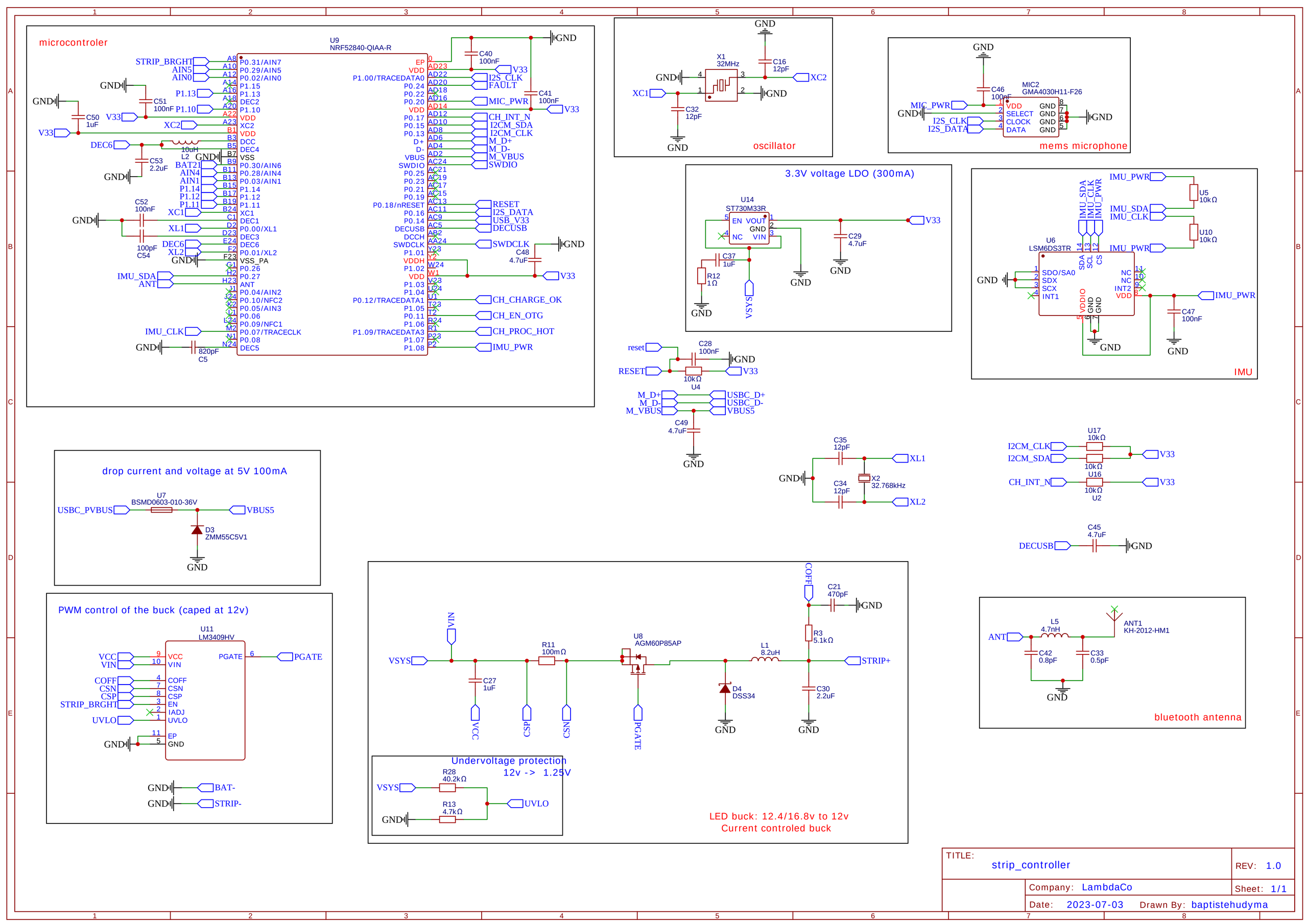
microcontroler
oscillator
mems microphone
3.3V voltage LDO (300mA)
IMU
drop current and voltage at 5V 100mA
PWM control of the buck (caped at 12v)
Undervoltage protection
12v -> 1.25V
LED buck: 12.4/16.8v to 12v
Current controled buck
bluetooth antenna
TITLE: strip_controller
REV: 1.0
Company: LambdaCo
Sheet: 1/1
Date: 2023-07-03
Drawn By: baptistehudyma