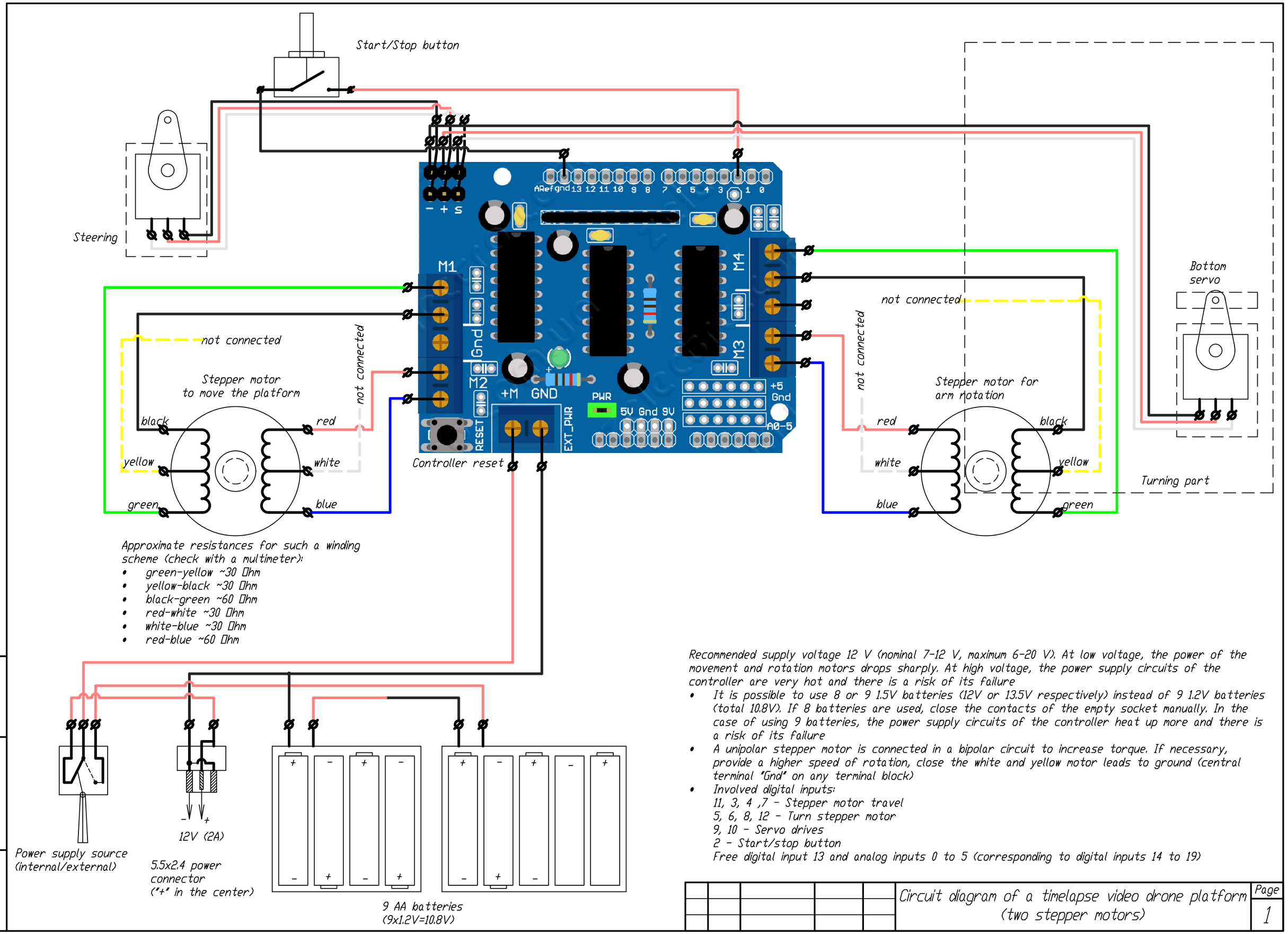

Recommended supply voltage 12 V (nominal 7-12 V, maximum 6-20 V). At low voltage, the power of the movement and rotation motors drops sharply. At high voltage, the power supply circuits of the controller are very hot and there is a risk of its failure

- It is possible to use 8 or 9 1.5V batteries (12V or 13.5V respectively) instead of 9 1.2V batteries (total 10.8V). If 8 batteries are used, close the contacts of the empty socket manually. In the case of using 9 batteries, the power supply circuits of the controller heat up more and there is a risk of its failure
- A unipolar stepper motor is connected in a bipolar circuit to increase torque. If necessary, provide a higher speed of rotation, close the white and yellow motor leads to ground (central terminal "Gnd" on any terminal block)
- Involved digital inputs:
  11, 3, 4 ,7 - Stepper motor travel
  5, 6, 8, 12 - Turn stepper motor
  9, 10 - Servo drives
  2 - Start/stop button
  Free digital input 13 and analog inputs 0 to 5 (corresponding to digital inputs 14 to 19)

					Circuit diagram of a timelapse video drone platform (two stepper motors)	Page 1

Формат А3

Инв. N подл. | Подпись и дата | Взам. инв. N