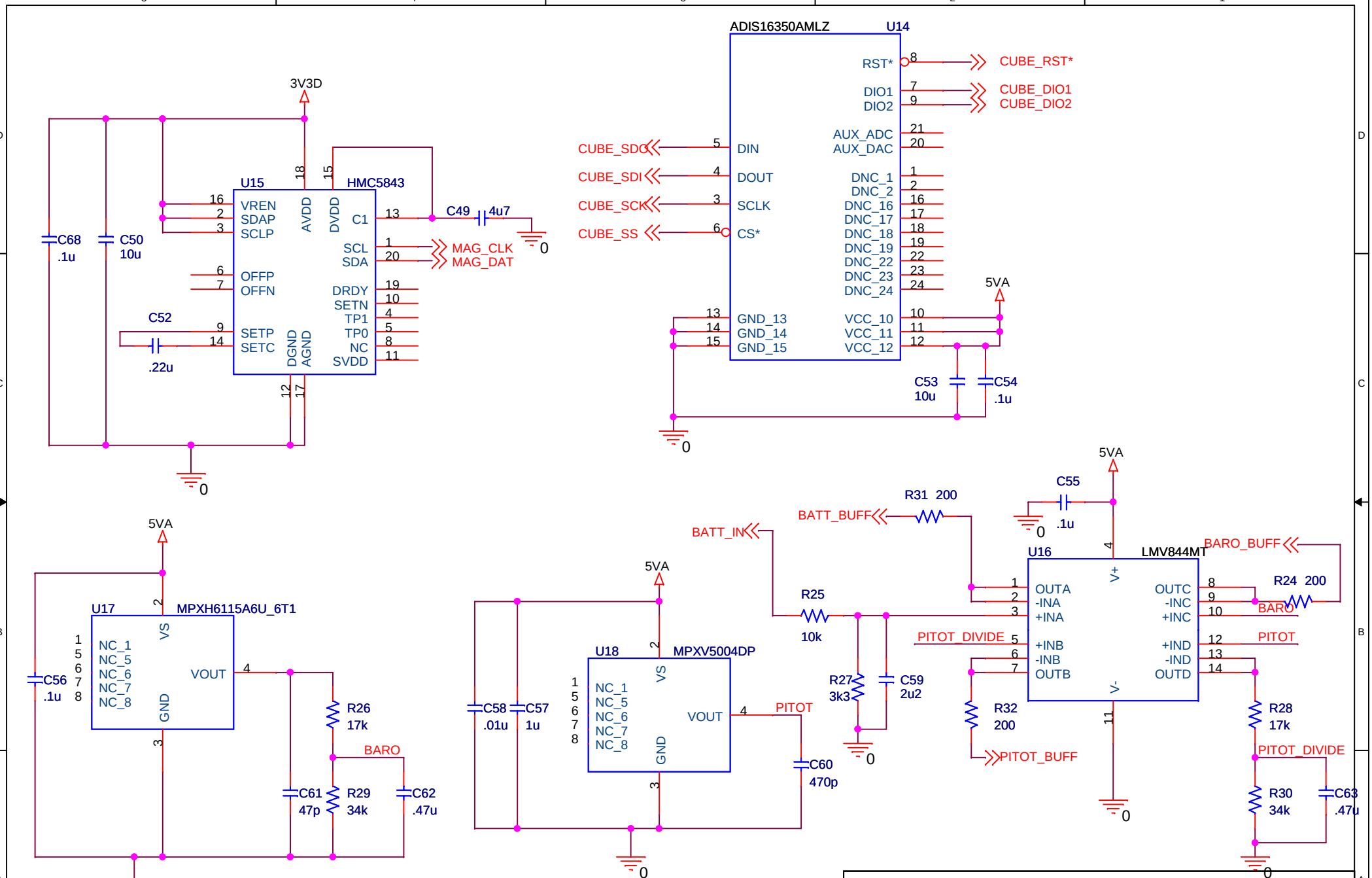


| | | |
|---|---|---|
| Title | SLUGS 2.1 AUTOPILOT | |
| Size A | Document Number <Doc> | Rev 1 |
| Date: Saturday, August 29, 2009 | Sheet 3 of 3 | |