Revision History

Revision	Date	Comments
1.0	2011-12-9	初次版本

Index

01:Revision History and Index 1

02:Function Block Diagram 2

03:S5PV210 (SYS)/Boot Option 3

04:S5PV210(Memory) 4

05:S5PV210 (Media) 5

06:S5PV210 (Power) 6

07:NAND/NOR Flash 7

08:Memory(DDR2) 8

09:Reset/JTAG/SD/Clock 9

10: LCD IF 10

11:system power 11

12:board connector 12

13:ID Mark/Fixed Hold 13

Title: Tiny210		
Size: A3	Document Number: <Doc>	Rev: 0.1
Date: Friday, May 24, 2013	Sheet 1 of 11	

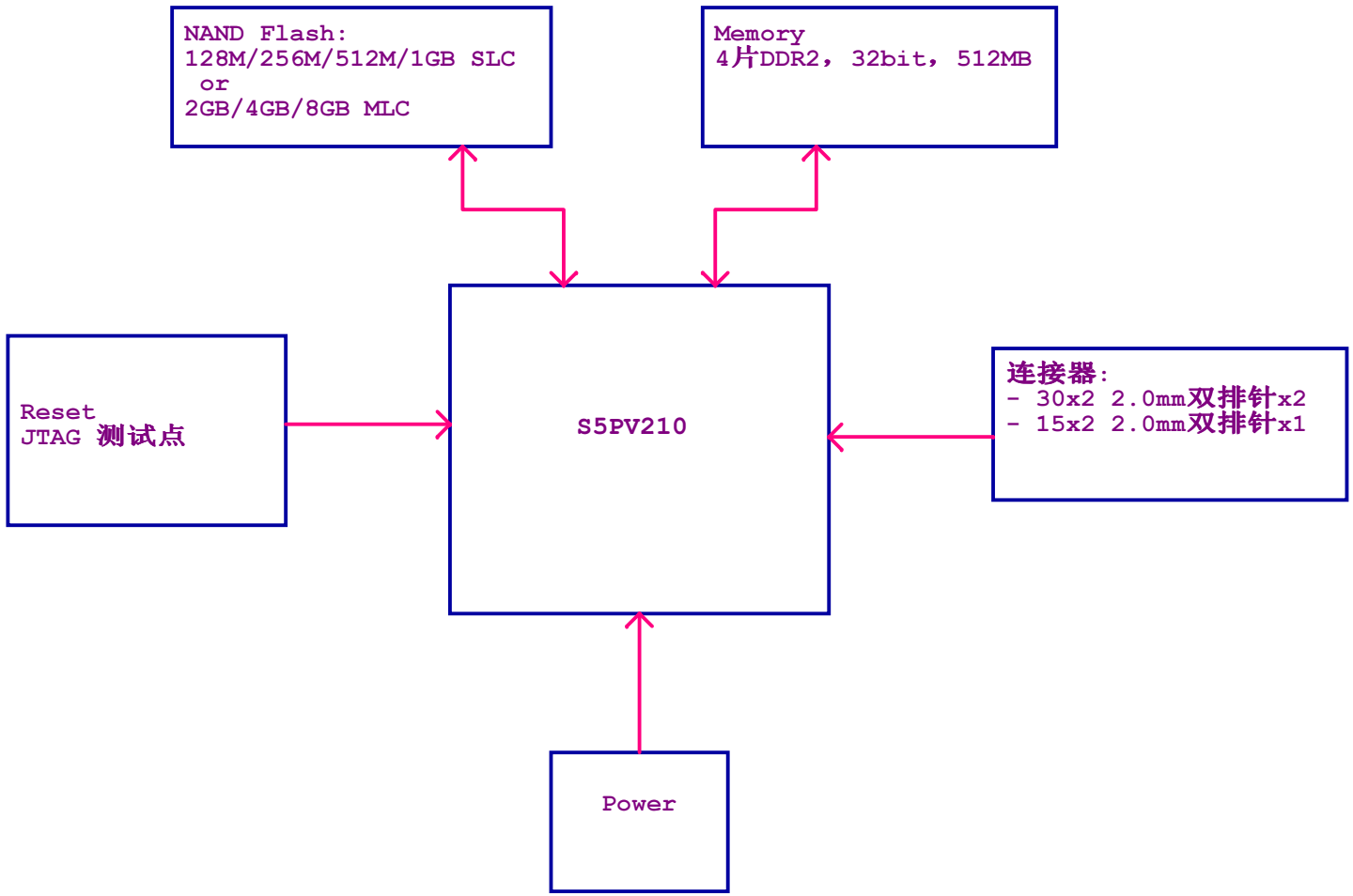

Title: Tiny210		
Size: A3	Document Number: <Doc>	Rev:
Date: Wednesday, September 25, 2013	Sheet 2 of 11	

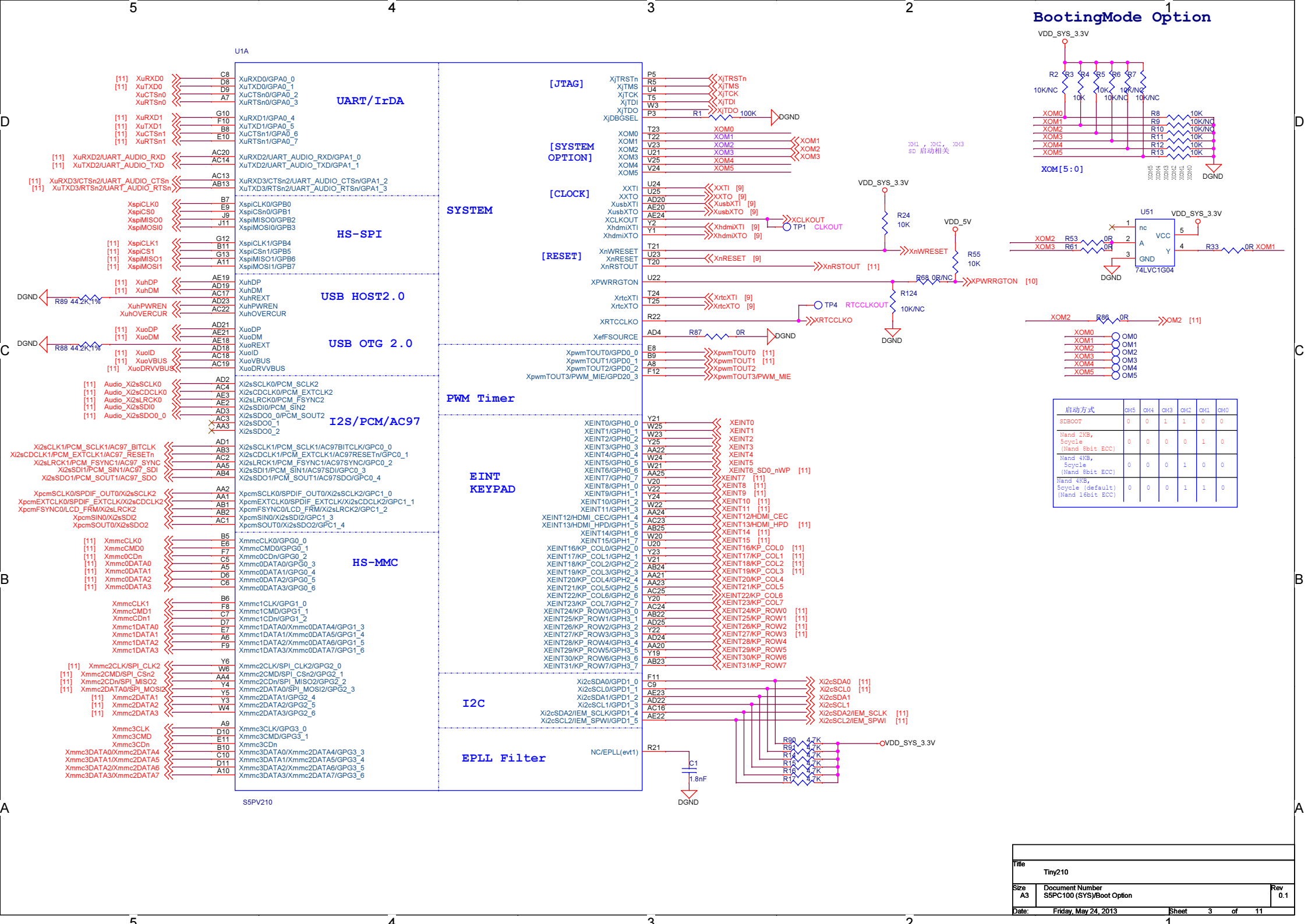
U1A
UART/IrDA
HS-SPI
USB HOST2.0
USB OTG 2.0
I2S/PCM/AC97
HS-MMC
SYSTEM
PWM Timer
EINT
KEYPAD
I2C
EPLL Filter
[JTAG]
[SYSTEM OPTION]
[CLOCK]
[RESET]
S5PV210
BootingMode Option
XOM[5:0]
74LVC1G04
启动方式
SDBOOT
Nand 2KB, 5cycle (Nand 8bit ECC)
Nand 4KB, 5cycle (Nand 8bit ECC)
Nand 4KB, 5cycle (default) (Nand 16bit ECC)
Title
Tiny210
Size
A3
Document Number
S5PC100 (SYS)/Boot Option
Rev
0.1
Date:
Friday, May 24, 2013
Sheet
3
of
11

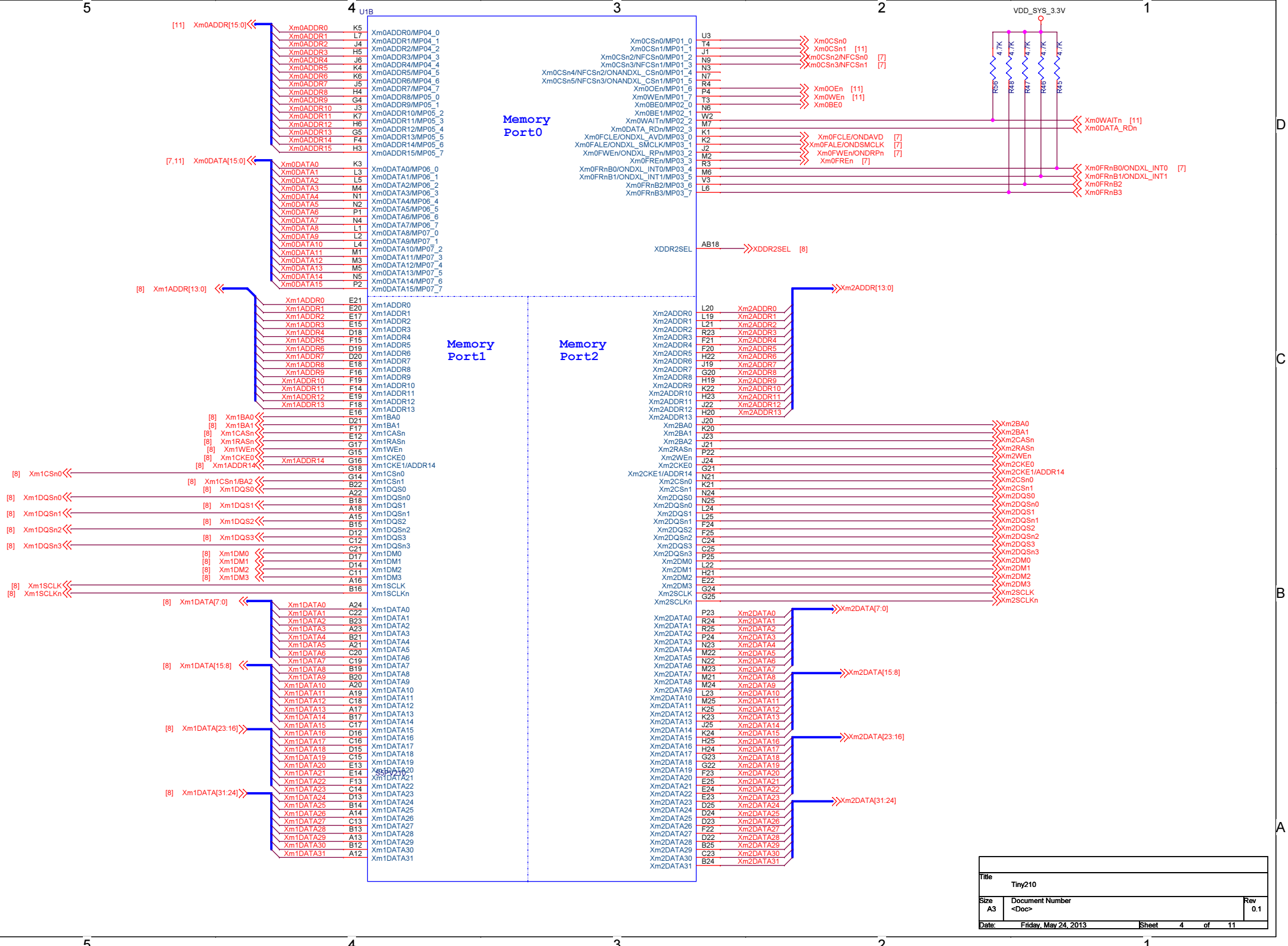
U1B
Memory Port0
Memory Port1
Memory Port2
VDD_SYS_3.3V
4.7K
R56
R48
R47
R46
R45
XDDR2SEL
Title
Tiny210
Size
A3
Document Number
<Doc>
Rev
0.1
Date:
Friday, May 24, 2013
Sheet
4
of
11

U1C
[DSI]
MIPI-DSI/CSI
[CSI]
LCDC
HDMI
TouchScreen ADC
TVOUT DAC
Modem
Camera B
CF
MHL
Key
SROM
addr[16:22]
(VDD_MODEM)
CAM (VDD_CAM)
S5PV210
camera B
LED
camera 控制
GPIO
WIFI
VDD_SYS_3.3V
硬件 版本识别
Micro210
Friday, May 24, 2013

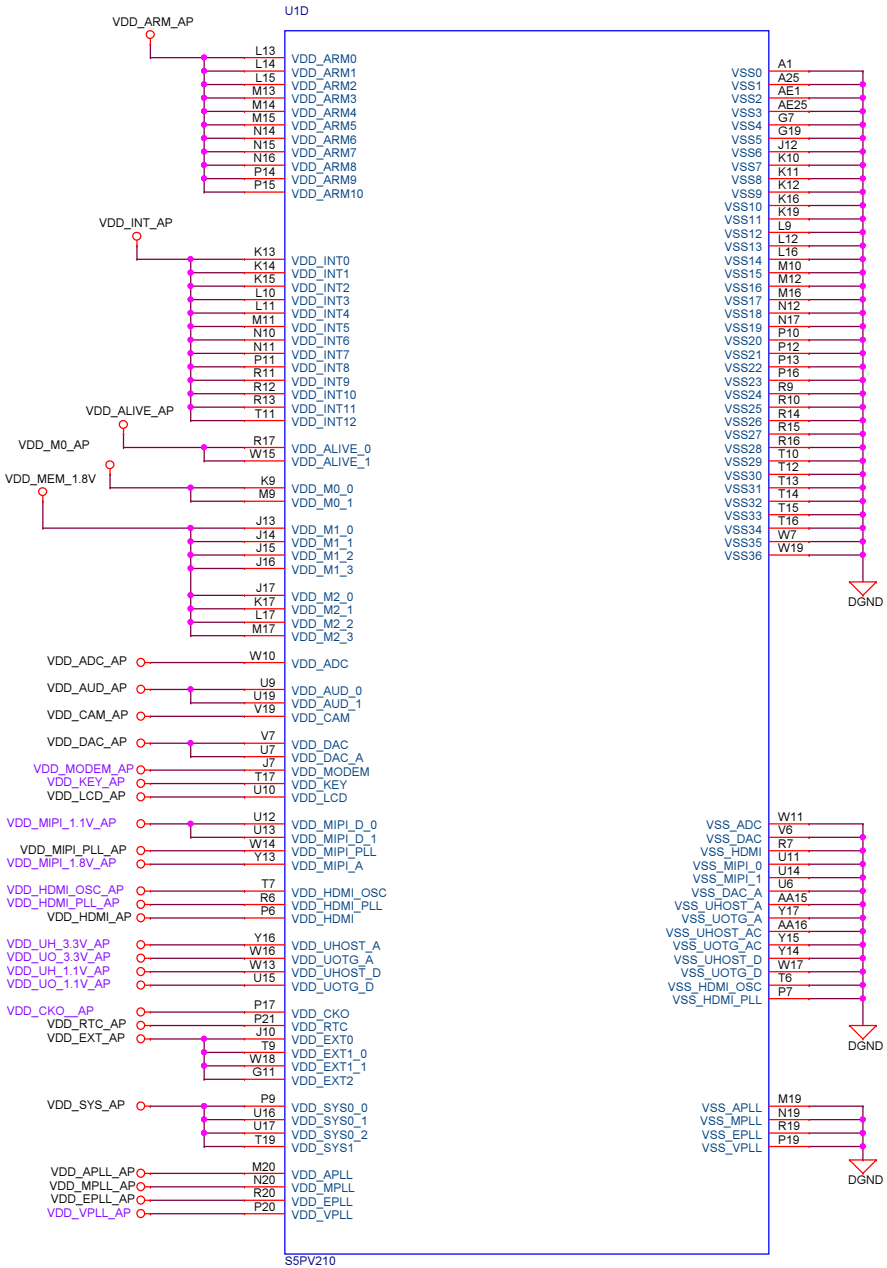

Title	Tiny210	
Size A3	Document Number	Rev 0.1
Date: Friday, May 24, 2013	Sheet 6 of 11	

NAND Flash memory

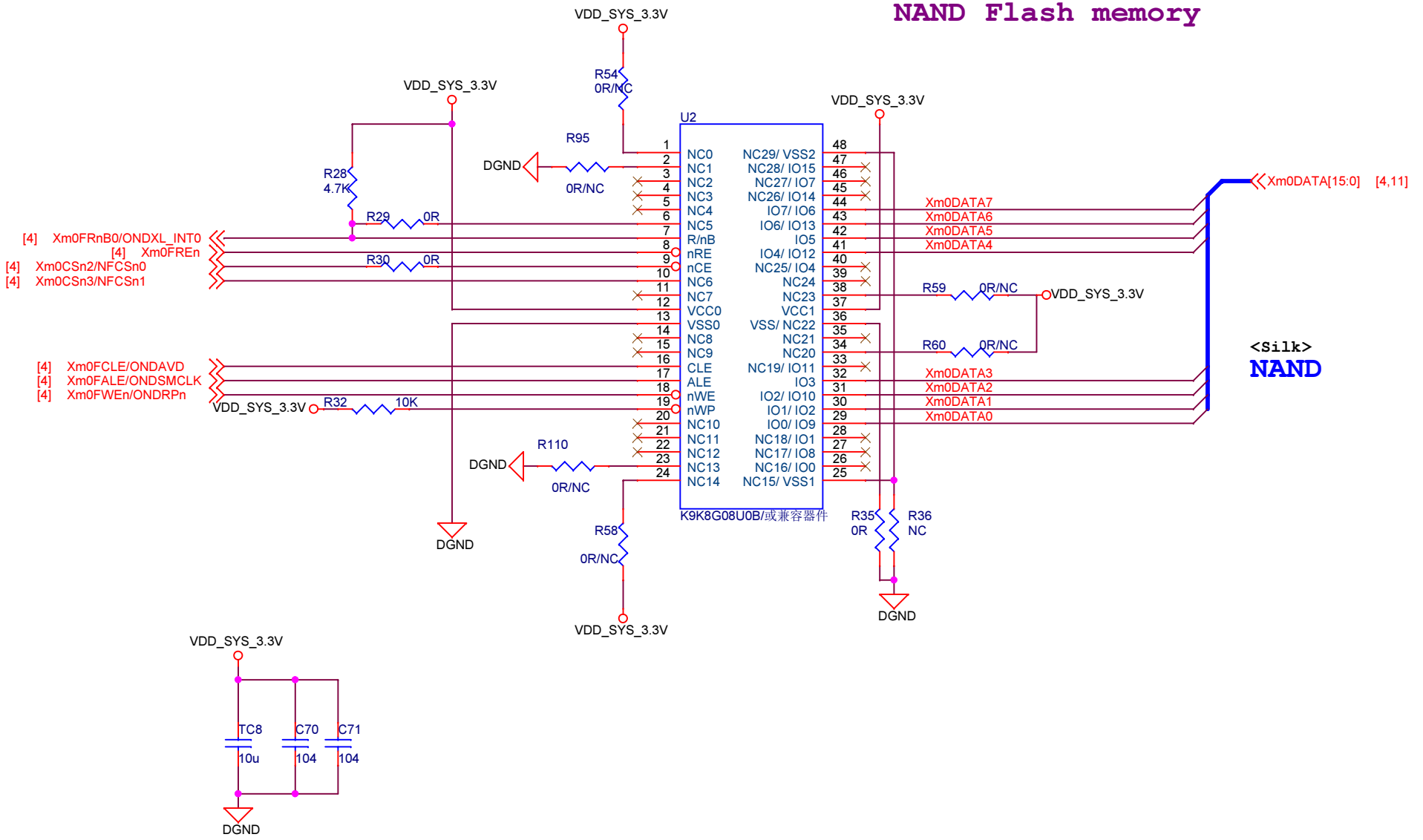

Title	Tiny210	
Size A4	Document Number <Doc>	Rev 0.1
Date: Wednesday, September 25, 2013	Sheet 7 of 11	

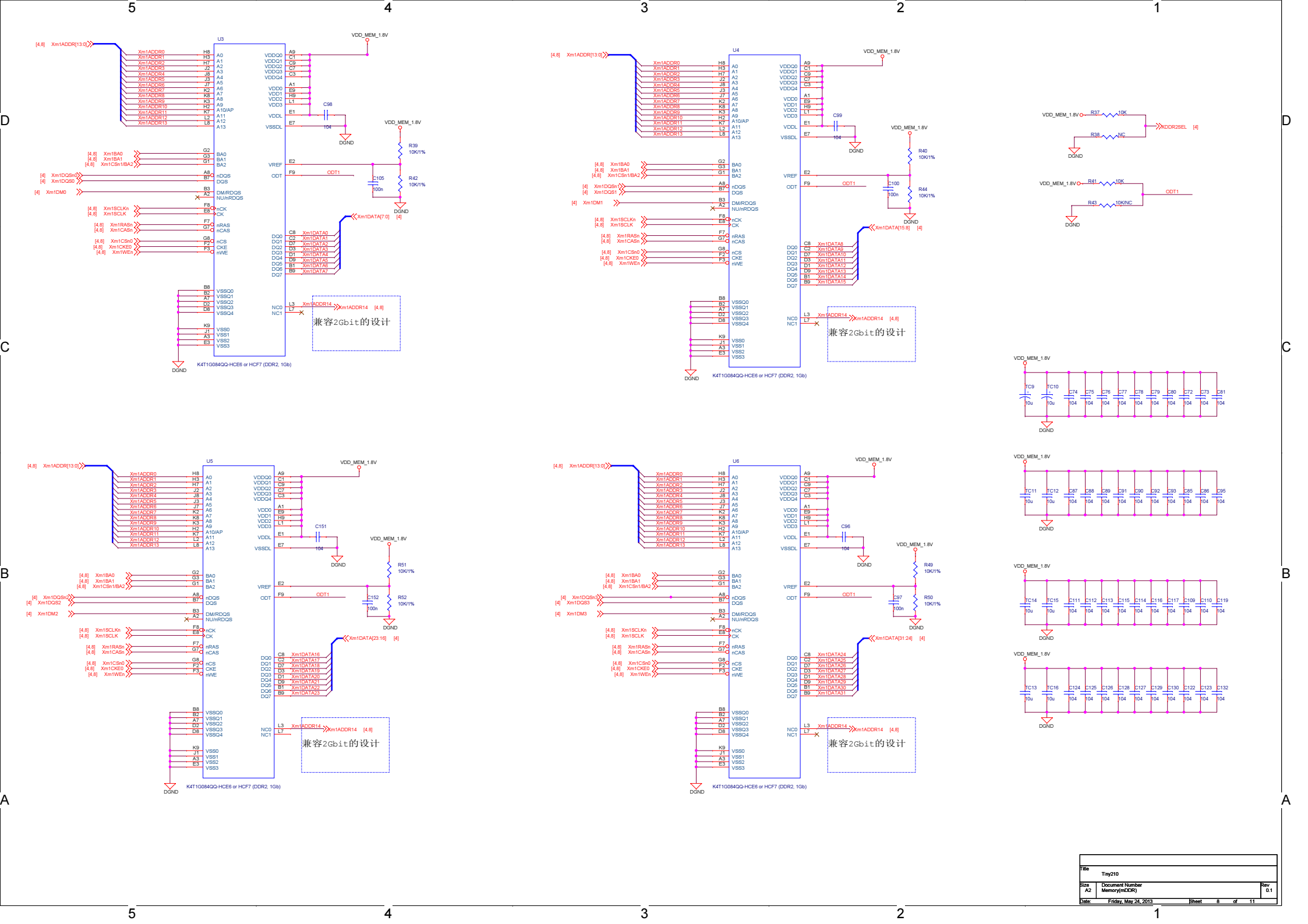
U3
K4T1G084QQ-HCE6 or HCF7 (DDR2, 1Gb)
兼容2Gbit的设计
U4
K4T1G084QQ-HCE6 or HCF7 (DDR2, 1Gb)
兼容2Gbit的设计
U5
K4T1G084QQ-HCE6 or HCF7 (DDR2, 1Gb)
兼容2Gbit的设计
U6
K4T1G084QQ-HCE6 or HCF7 (DDR2, 1Gb)
兼容2Gbit的设计
VDD_MEM_1.8V
DGND
Xm1ADDR[13:0]
Xm1DATA[7:0]
Xm1DATA[15:8]
Xm1DATA[23:16]
Xm1DATA[31:24]
XDDR2SEL
Title
Tiny210
Size
A2
Document Number
Memory(mDDR)
Rev
0.1
Date:
Friday, May 24, 2013
Sheet
8
of
11

复位电路

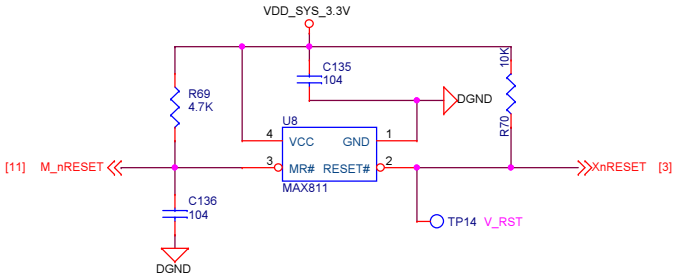

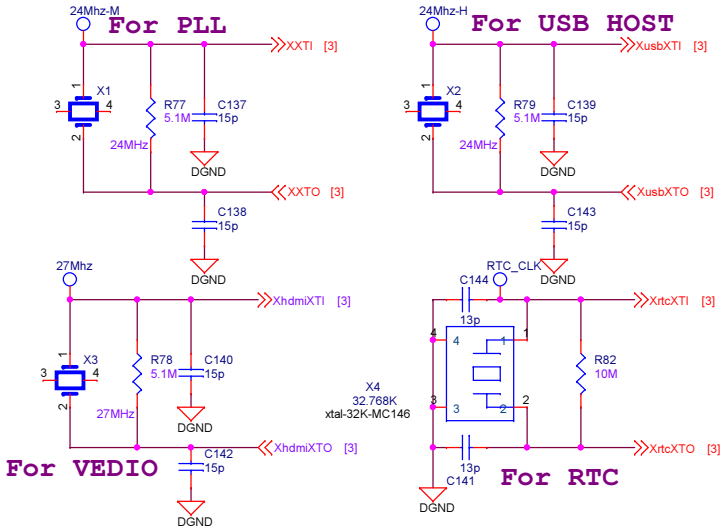

Title: Tiny210		
Size: A3	Document Number	Rev: 0.1
Date: Friday, May 24, 2013	Sheet 9 of 11	

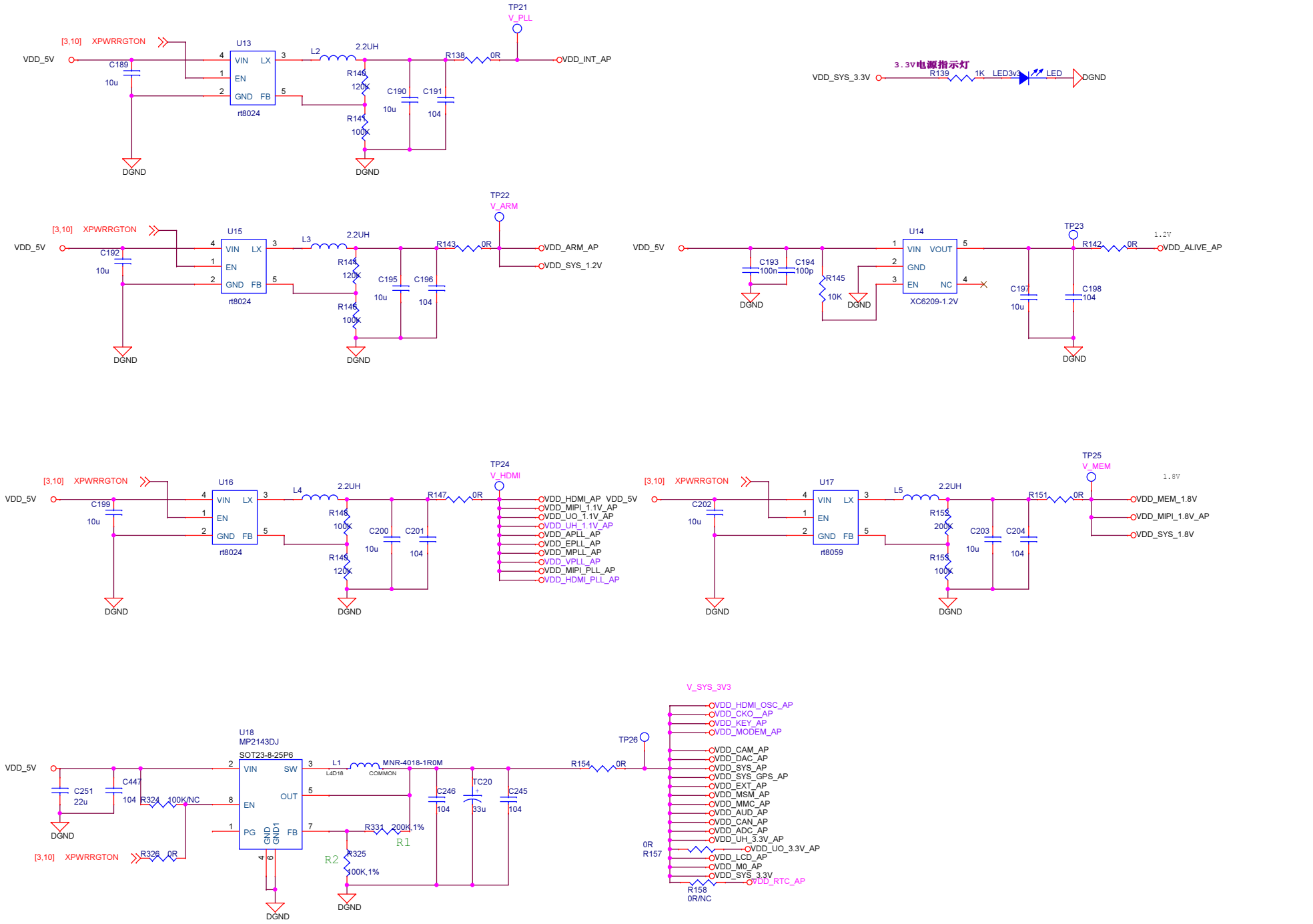

Title	Tiny210	
Size A3	Document Number	Rev 0.1
Date: Wednesday, September 25, 2013	Sheet 10 of 11	

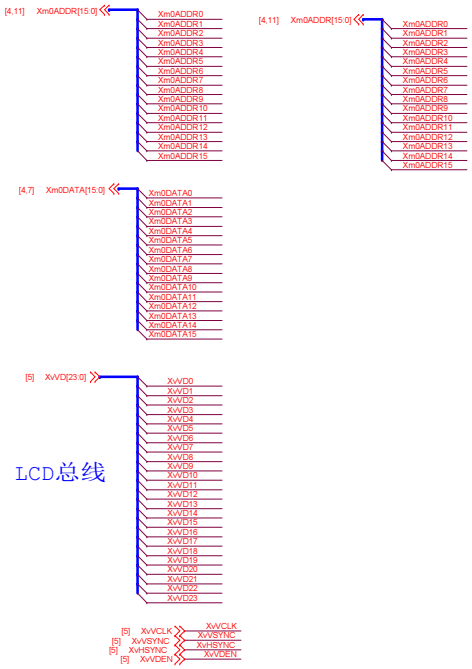

LCD总线

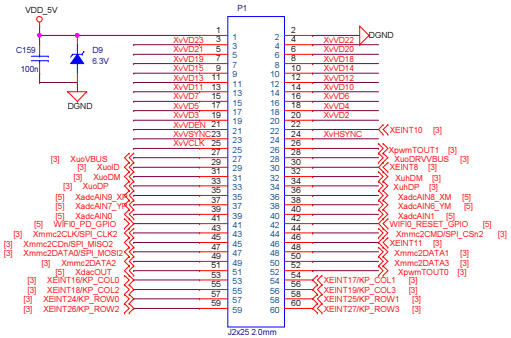

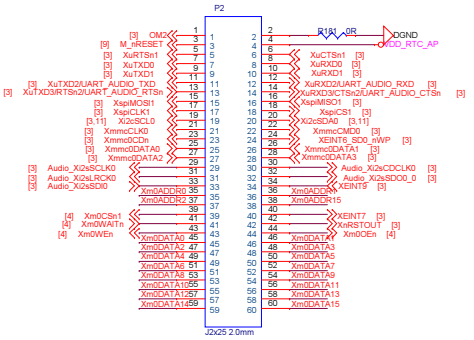

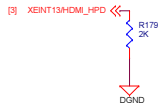

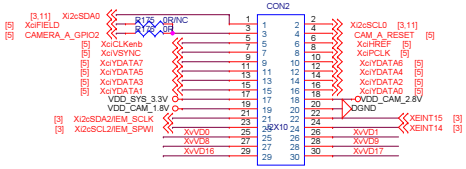

改为贴片座，也是2.0mm间距的IDC连接器

LED x 4

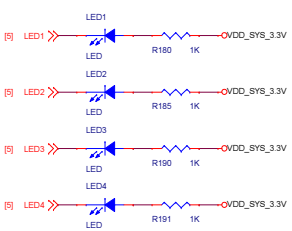

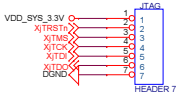

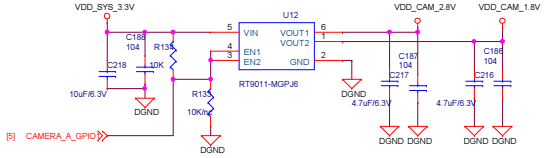

Title	Tiny210		
Size A2	Document Number <Doc>		Rev <RevCode>
Date: Wednesday, September 25, 2013	Sheet 11 of 11		