ESC Dev Board - Kururugi

v1.0

BATTERY INPUT

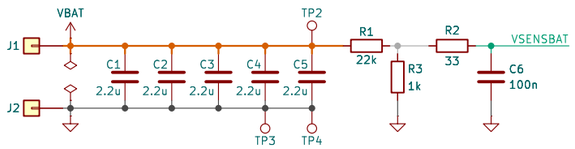

VGATE BUCK

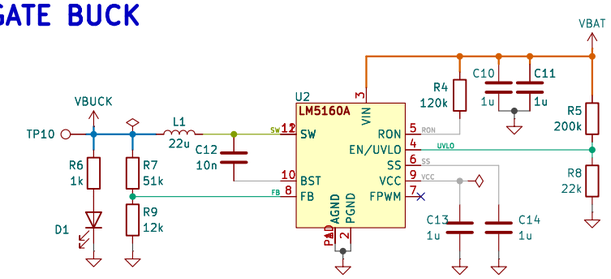

CRYSTAL

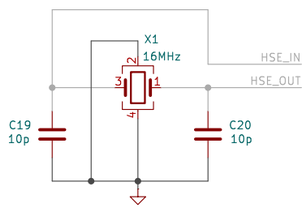

3V3 LDO

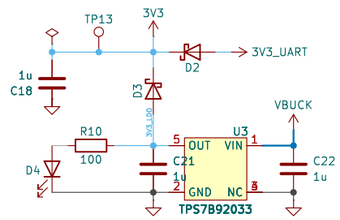

RGB LED

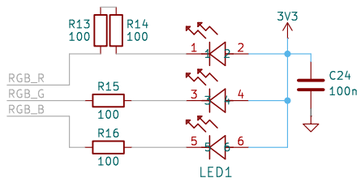

THROTTLE

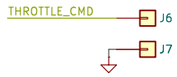

FIDUCIALS

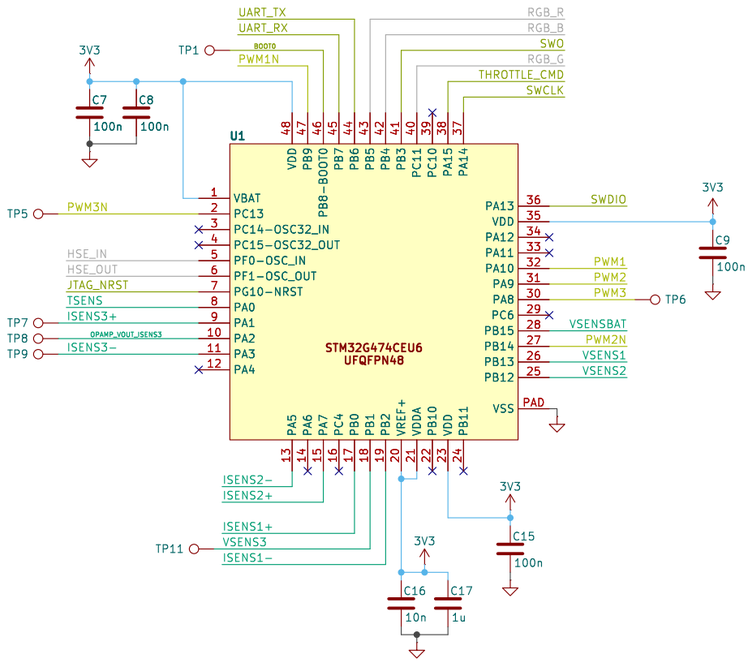

UART

JTAG

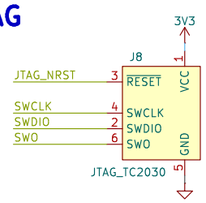

PHASE 1

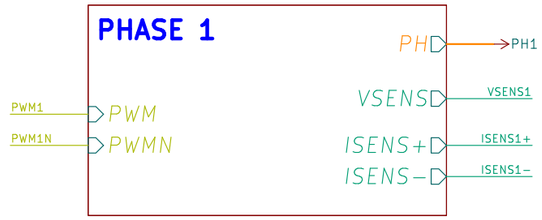

File: phase.kicad_sch

PHASE 2

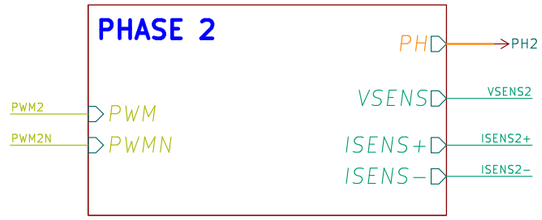

File: phase.kicad_sch

PHASE 3

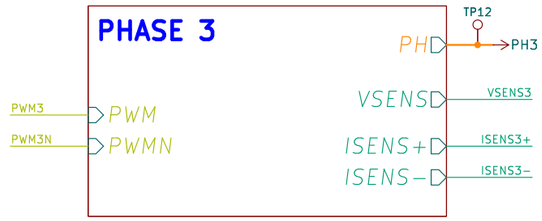

File: phase.kicad_sch

TEMP SENSING

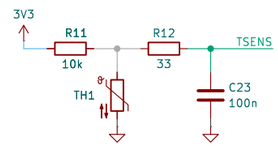

Kururugi−ESC

Bare Metal Foundry

Author: Stepane Binon		KiCad E.D.A. 9.0.4
Date: 2026−03−29	Path: /	**Rev: v1.0**
Size: A3	File: Kururugi−ESC.kicad_sch	Sheet: 1/4

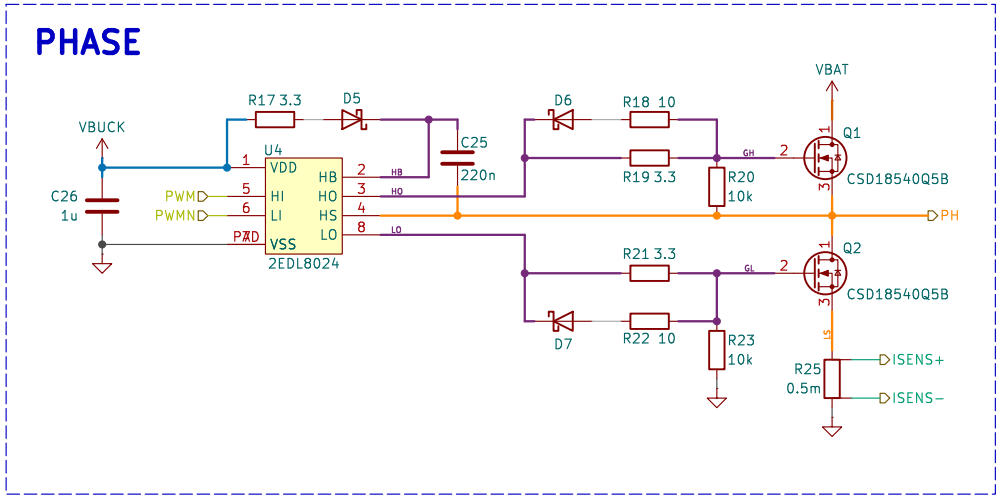

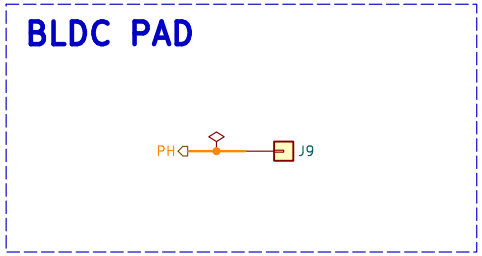

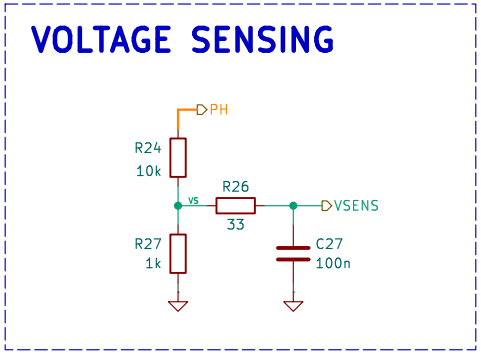

Kururugi–ESC

Bare Metal Foundry

Author: Stepane Binon		KiCad E.D.A. 9.0.4
Date: 2026–03–29	Path: /PHASE 1/	**Rev: v1.0**
Size: A4	File: phase.kicad_sch	Sheet: 2/4

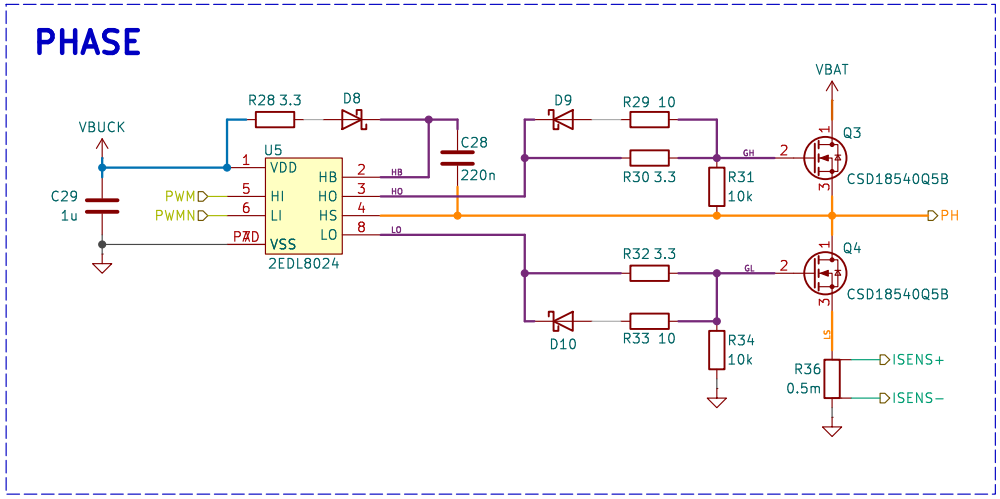

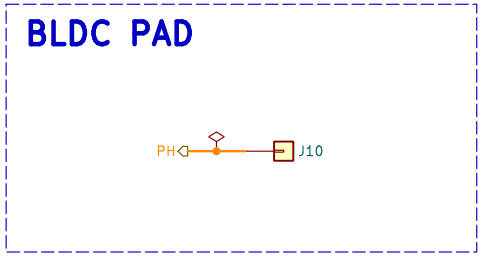

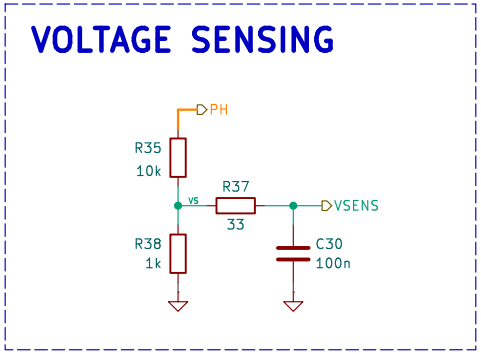

Kururugi–ESC

Bare Metal Foundry

Author: Stepane Binon		KiCad E.D.A. 9.0.4
Date: 2026–03–29	Path: /PHASE 2/	**Rev: v1.0**
Size: A4	File: phase.kicad_sch	Sheet: 3/4

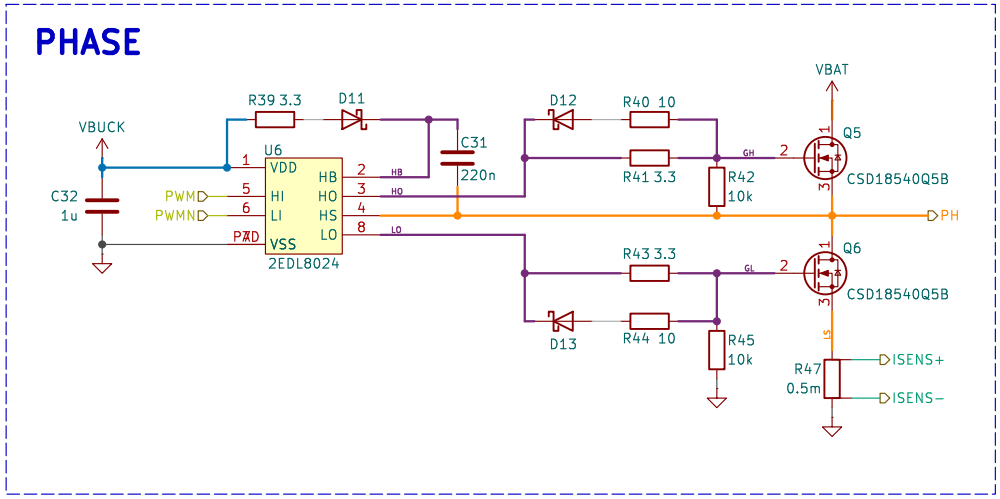

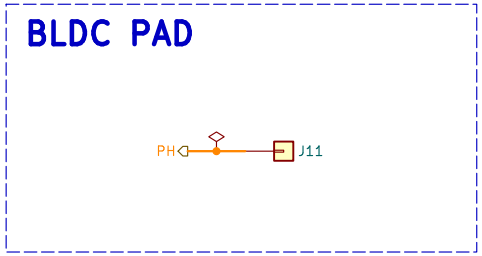

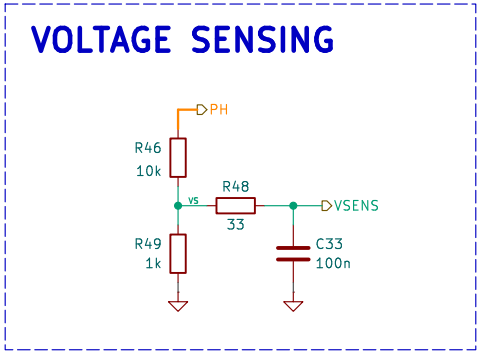

Kururugi–ESC

Bare Metal Foundry

Author: Stepane Binon		KiCad E.D.A. 9.0.4
Date: 2026–03–29	Path: /PHASE 3/	**Rev: v1.0**
Size: A4	File: phase.kicad_sch	Sheet: 4/4