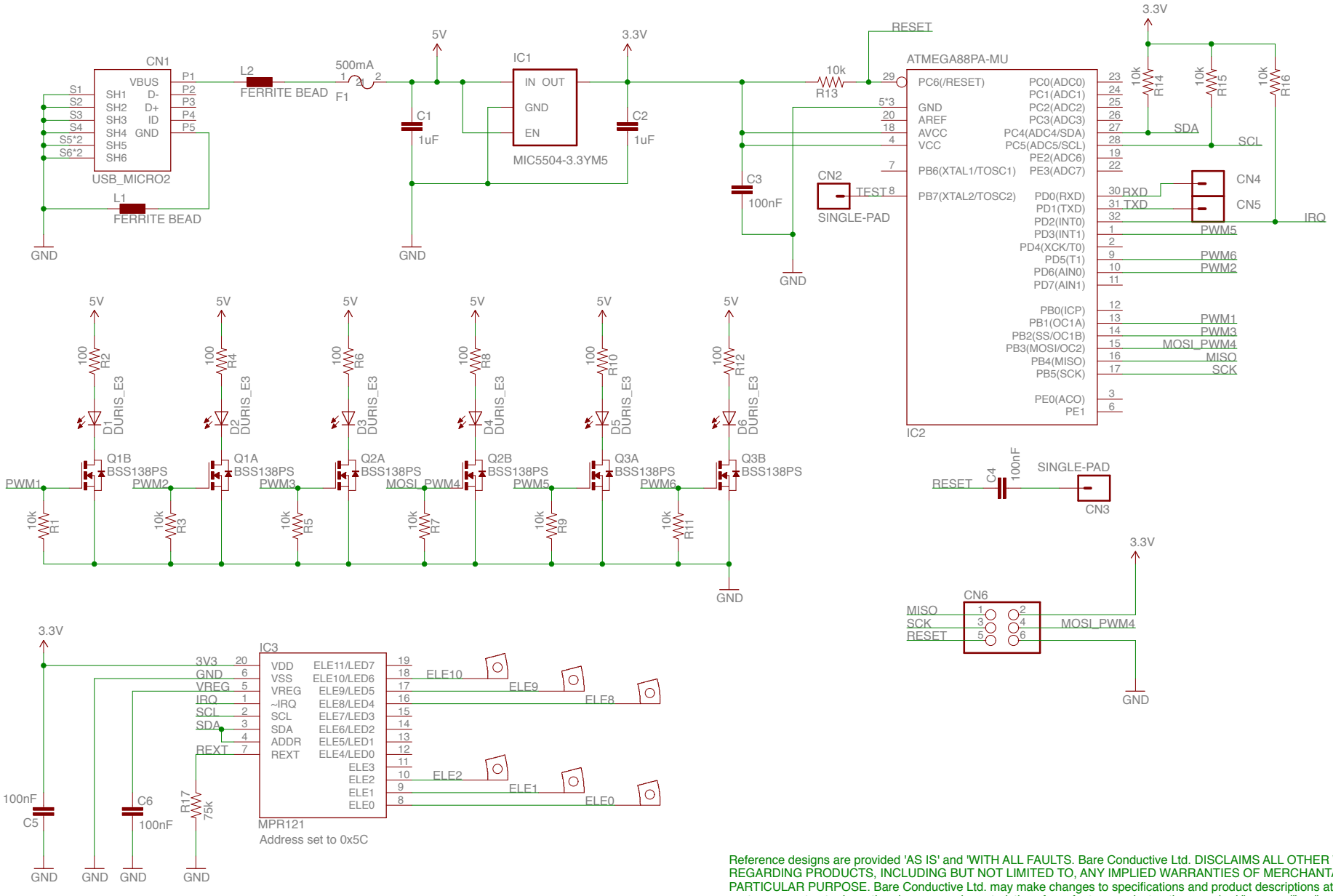

Reference designs are provided 'AS IS' and 'WITH ALL FAULTS. Bare Conductive Ltd. DISCLAIMS ALL OTHER WARRANTIES, EXPRESS OR IMPLIED, REGARDING PRODUCTS, INCLUDING BUT NOT LIMITED TO, ANY IMPLIED WARRANTIES OF MERCHANTABILITY OR FITNESS FOR A PARTICULAR PURPOSE. Bare Conductive Ltd. may make changes to specifications and product descriptions at any time, without notice. The customer must not rely on the absence or characteristics of any features or instructions marked "reserved" or "undefined." Bare Conductive Ltd. reserves these for future definition and shall have no responsibility whatsoever for conflicts or incompatibilities arising from future changes to them. The product information on the Web Site or Materials is subject to change without notice. Do not finalise a design with this information. BARE CONDUCTIVE is a registered trademark.