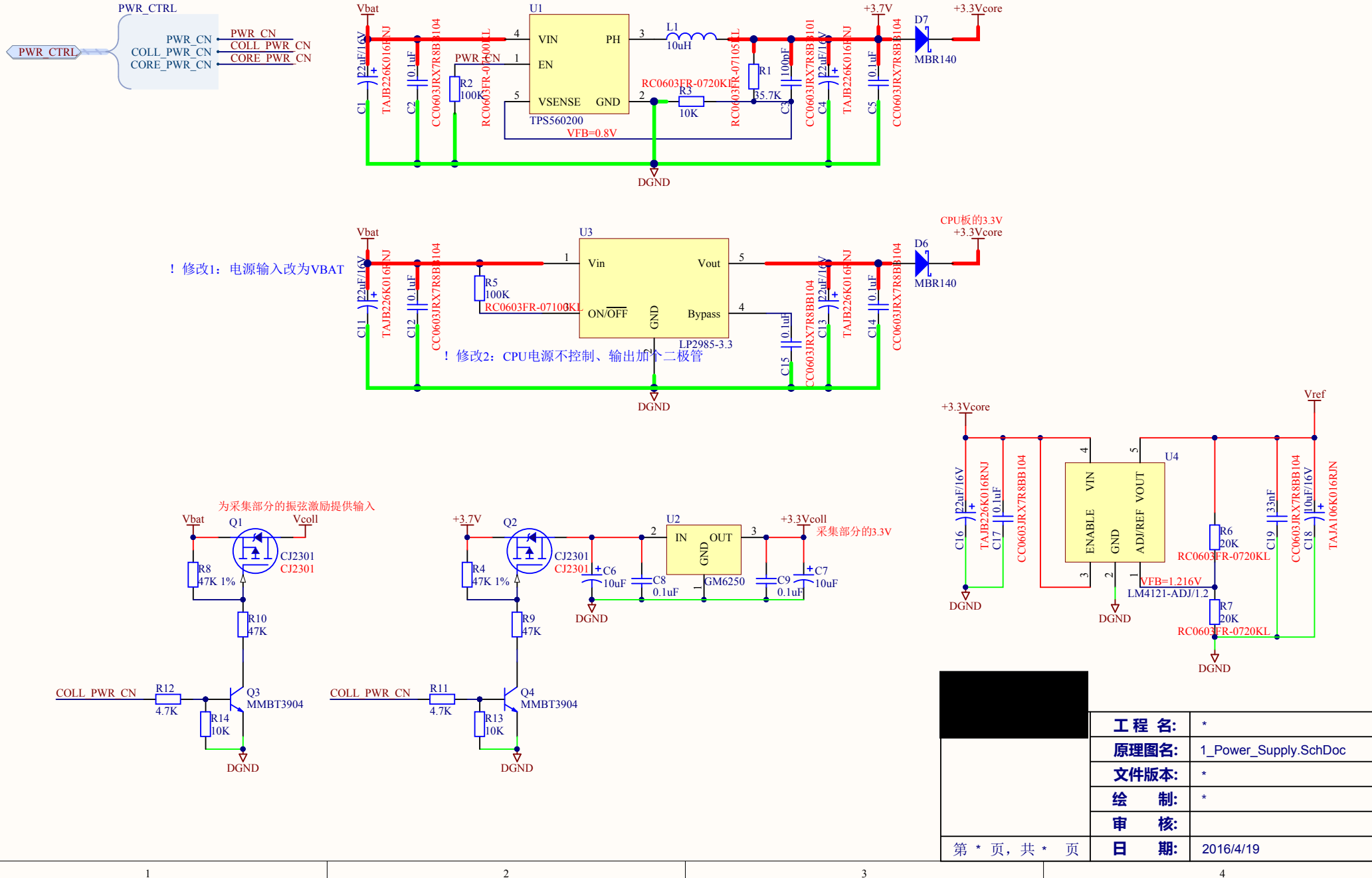

工 程 名:	*
原理图名:	1_Power_Supply.SchDoc
文件版本:	*
绘 制:	*
审 核:	
第 * 页，共 * 页	日 期: 2016/4/19

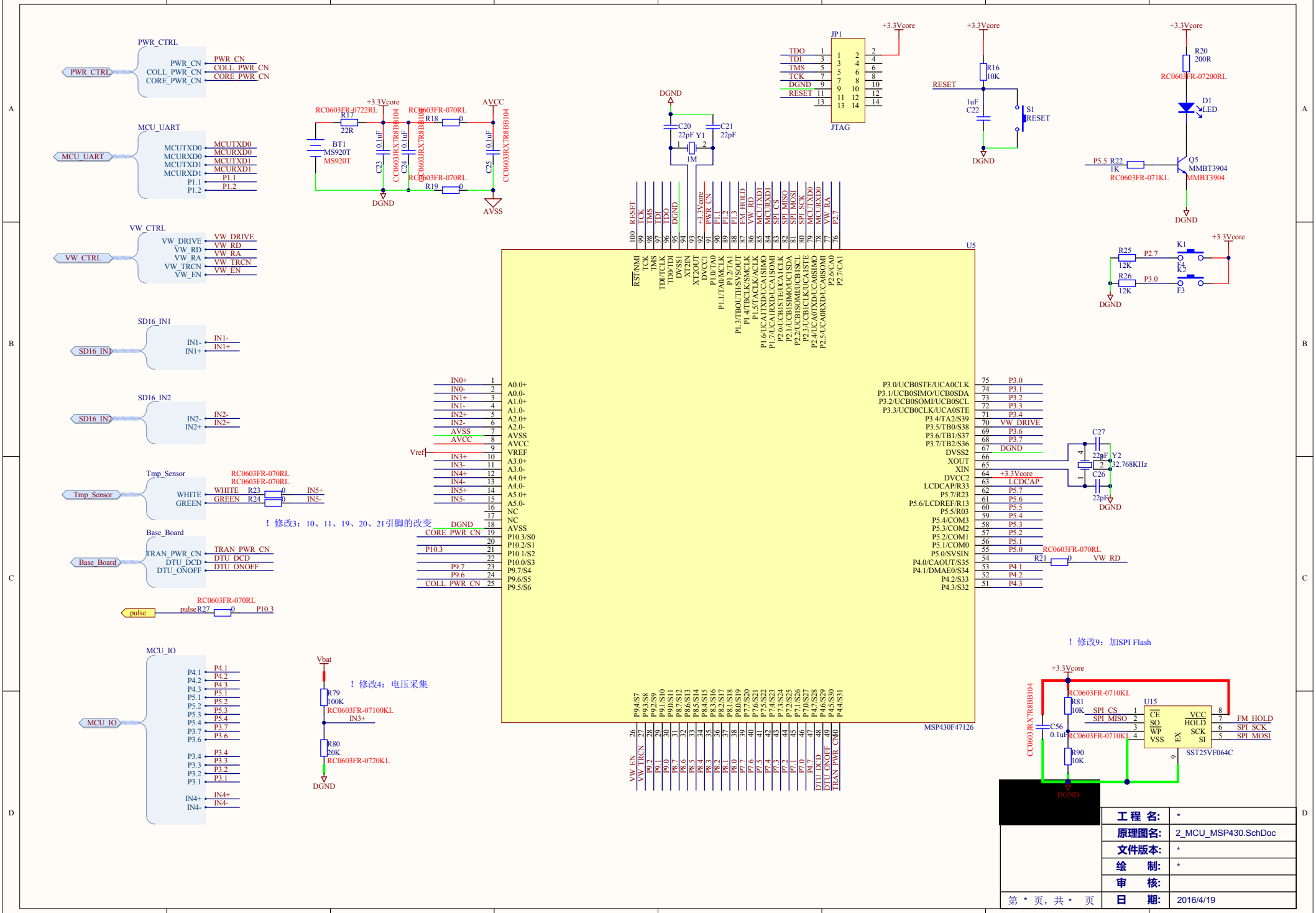
PWR_CTRL
MCU_UART
VW_CTRL
SD16_IN1
SD16_IN2
Tmp_Sensor
Base_Board
pulse
MCU_IO
JP1
JTAG
U5
MSP430F47126
U15
SST25VF064C
BT1
MS920T
Y1
Y2
32.768KHz
LED
MMBT3904
S1
RESET
+3.3Vcore
DGND
AVCC
AVSS
Vref
Vbat
! 修改3：10、11、19、20、21引脚的改变
! 修改4：电压采集
! 修改9：加SPI Flash
工 程 名: *
原理图名: 2_MCU_MSP430.SchDoc
文件版本: *
绘 制: *
审 核:
日 期: 2016/4/19
第 * 页，共 * 页

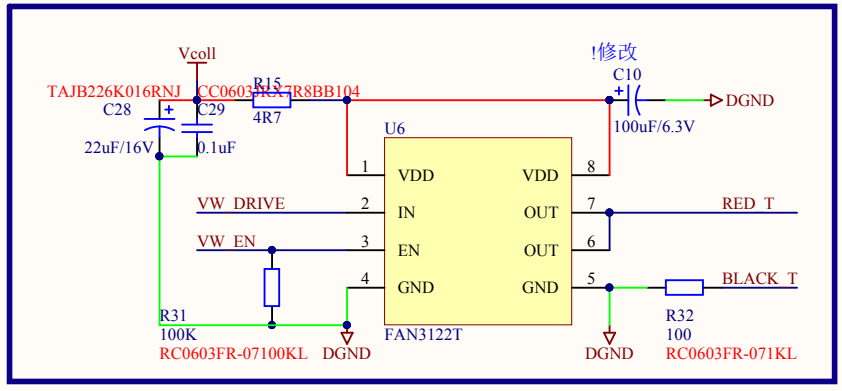

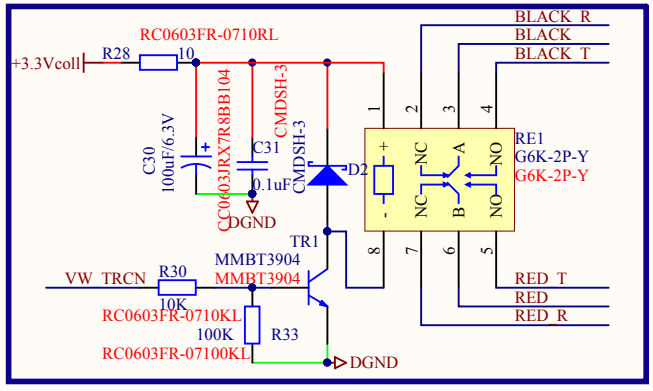

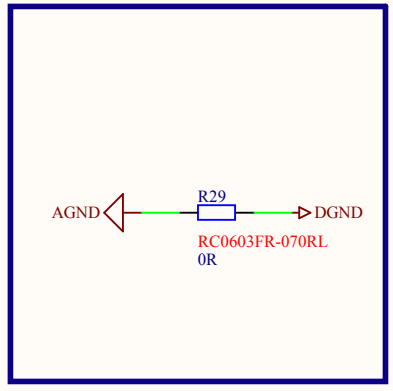

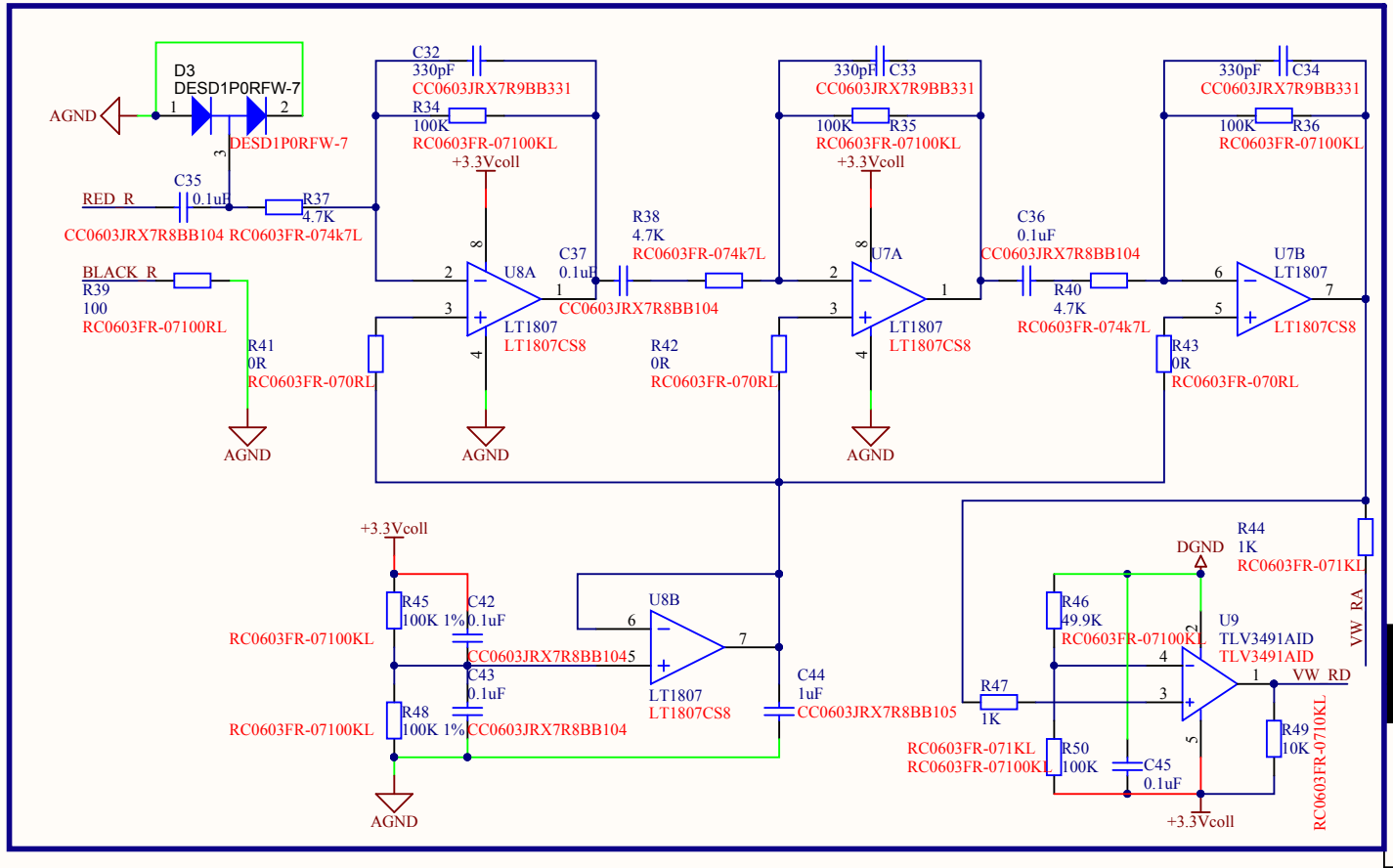

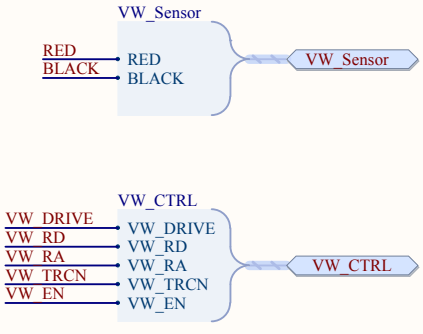

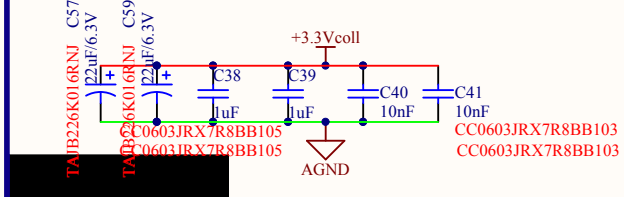

工 程 名:	*
原理图名:	3_VW_Sensor.SchDoc
文件版本:	*
绘 制:	*
审 核:	
第 * 页，共 * 页	日 期: 2016/4/19

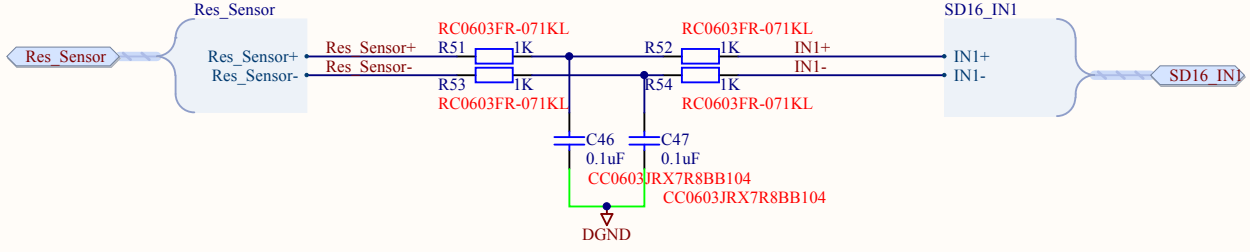

工 程 名:	*
原理图名:	4_Resistor_Sensor.SchDoc
文件版本:	*
绘 制:	*
审 核:	
第 * 页，共 * 页	日 期: 2016/4/19

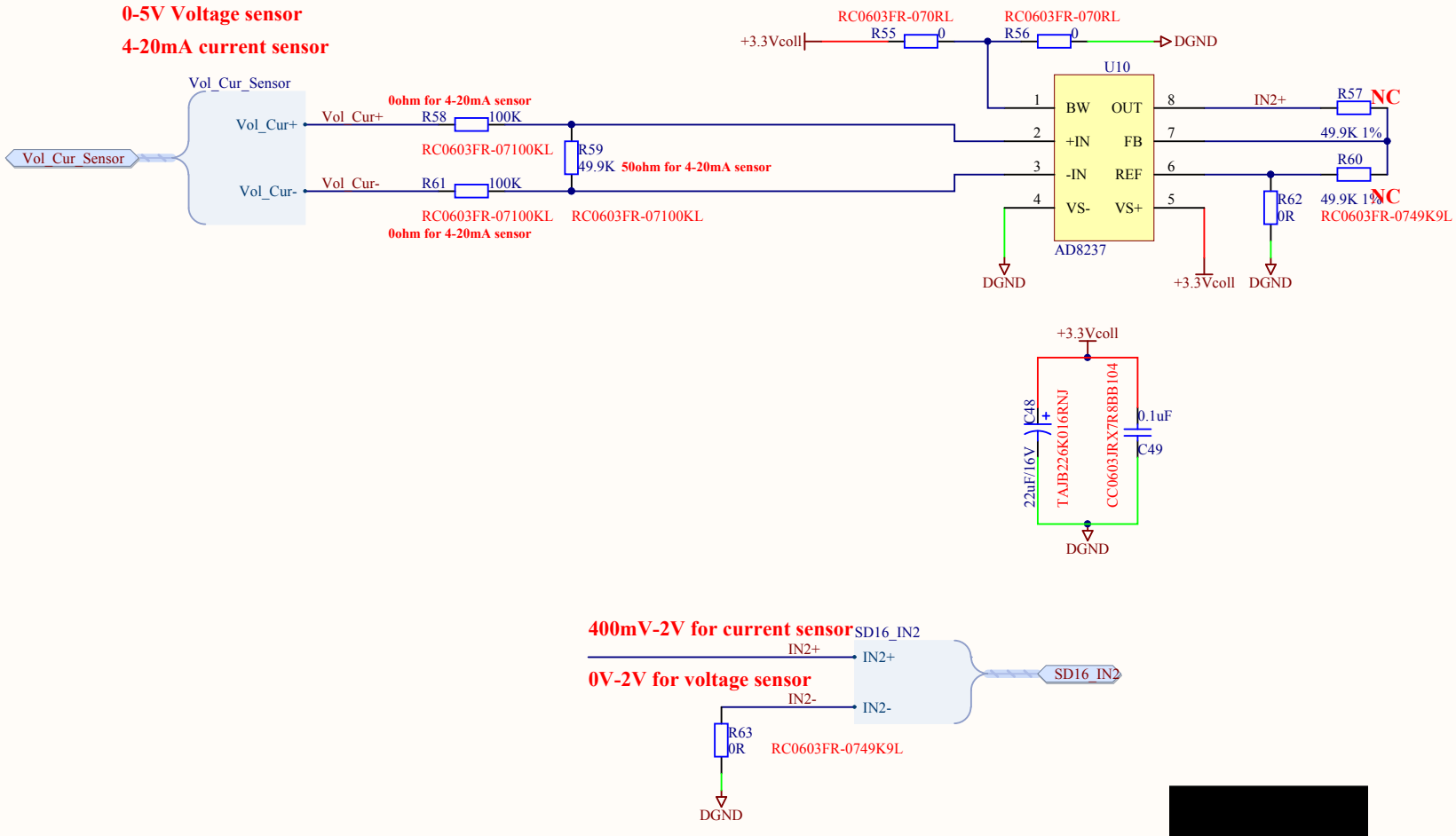

工 程 名:	*
原理图名:	5_Current_Voltage_Sensor.SchDoc
文件版本:	*
绘 制:	*
审 核:	
第 * 页，共 * 页	日 期: 2016/4/19

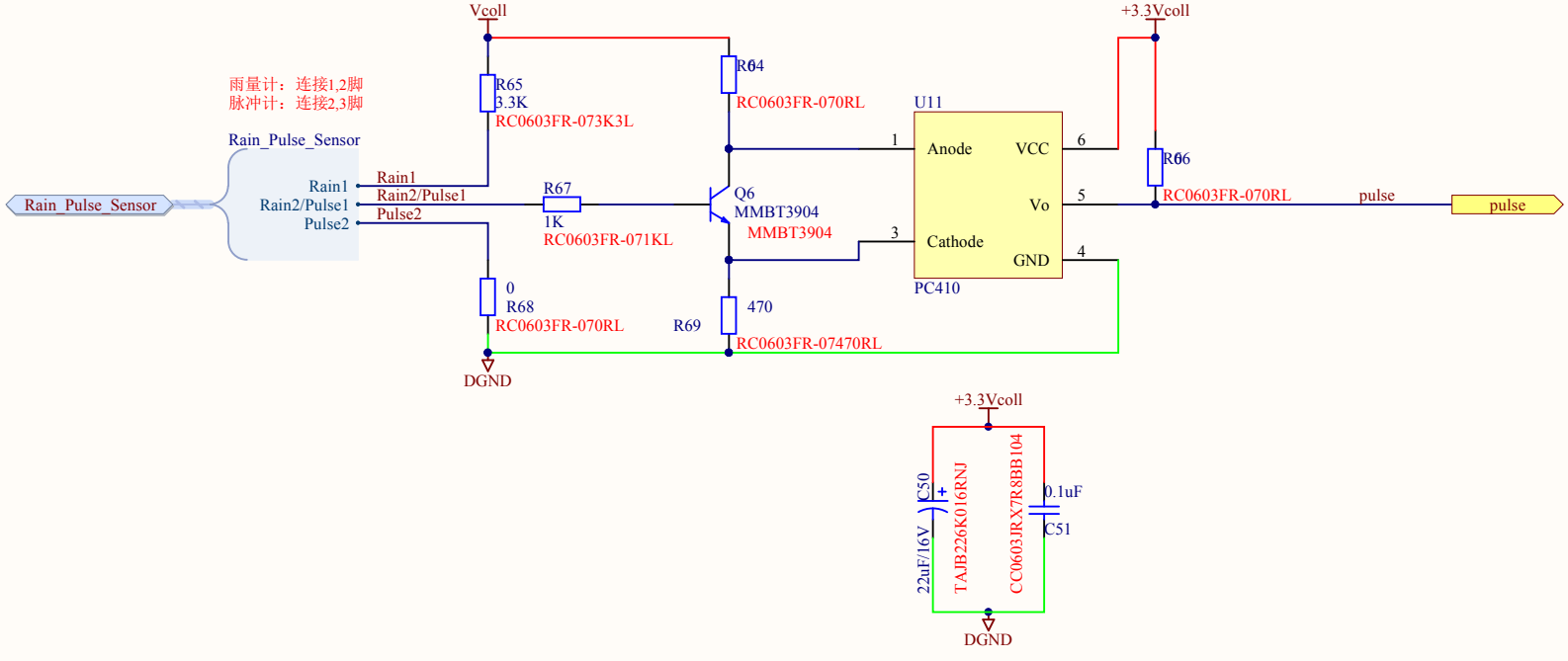

工 程 名:	*
原理图名:	6_Pulse_Sensor.SchDoc
文件版本:	*
绘 制:	*
审 核:	
第 * 页，共 * 页	日 期: 2016/4/19

！修改5：MCUUART1固定485信号输出，MCUUART0用模拟开关分两路输出TTL电平

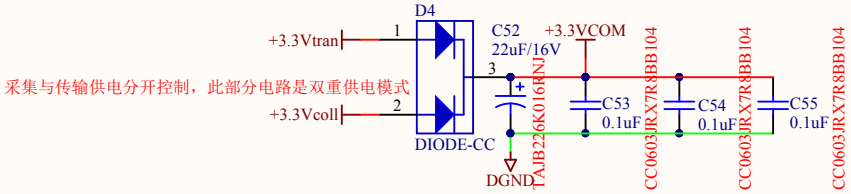

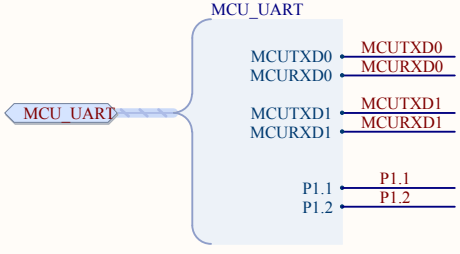

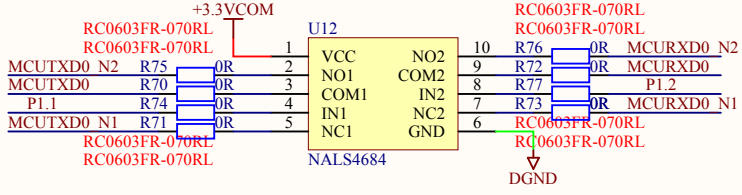

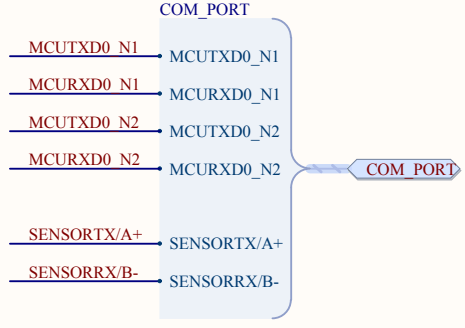

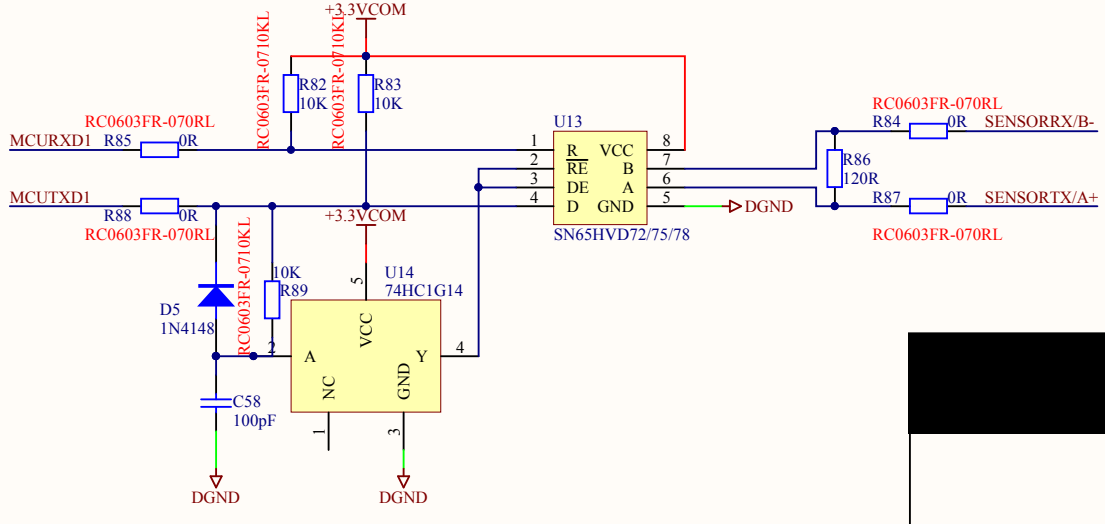

工 程 名:	*
原理图名:	7_RS485_RS232_Sensor.SchDoc
文件版本:	*
绘 制:	*
审 核:	
第 * 页，共 * 页	日 期: 2016/4/19

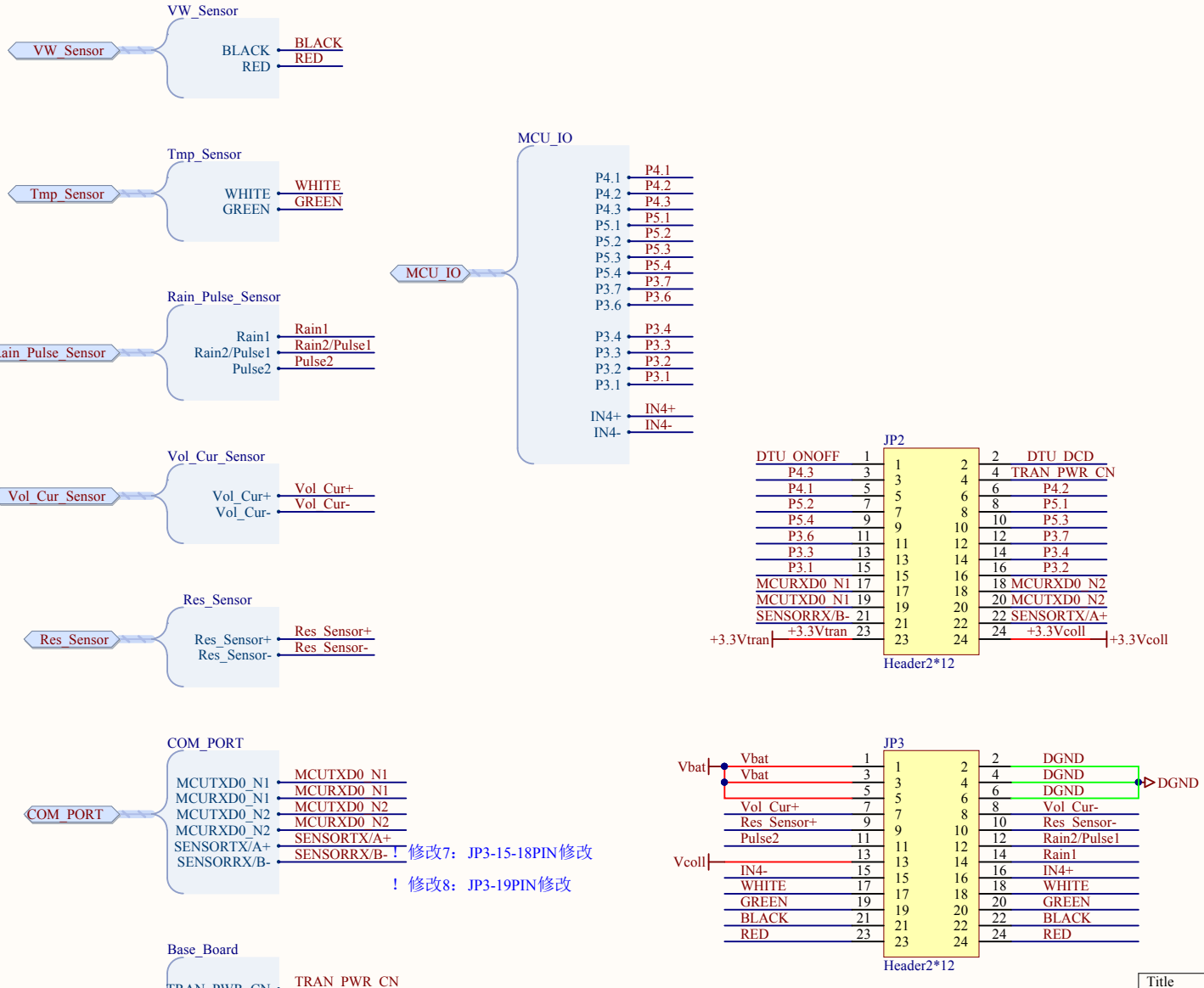
VW_Sensor
VW_Sensor
BLACK
RED
BLACK
RED
Tmp_Sensor
Tmp_Sensor
WHITE
GREEN
WHITE
GREEN
Rain_Pulse_Sensor
Rain_Pulse_Sensor
Rain1
Rain2/Pulse1
Pulse2
Rain1
Rain2/Pulse1
Pulse2
Vol_Cur_Sensor
Vol_Cur_Sensor
Vol_Cur+
Vol_Cur-
Vol_Cur+
Vol_Cur-
Res_Sensor
Res_Sensor
Res_Sensor+
Res_Sensor-
Res_Sensor+
Res_Sensor-
COM_PORT
COM_PORT
MCUTXD0_N1
MCURXD0_N1
MCUTXD0_N2
MCURXD0_N2
SENSORTX/A+
SENSORRX/B-
MCUTXD0_N1
MCURXD0_N1
MCUTXD0_N2
MCURXD0_N2
SENSORTX/A+
SENSORRX/B-
Base_Board
Base_Board
TRAN_PWR_CN
DTU_DCD
DTU_ONOFF
TRAN_PWR_CN
DTU_DCD
DTU_ONOFF
MCU_IO
MCU_IO
P4.1
P4.2
P4.3
P5.1
P5.2
P5.3
P5.4
P3.7
P3.6
P3.4
P3.3
P3.2
P3.1
IN4+
IN4-
P4.1
P4.2
P4.3
P5.1
P5.2
P5.3
P5.4
P3.7
P3.6
P3.4
P3.3
P3.2
P3.1
IN4+
IN4-
JP2
DTU_ONOFF 1
P4.3 3
P4.1 5
P5.2 7
P5.4 9
P3.6 11
P3.3 13
P3.1 15
MCURXD0_N1 17
MCUTXD0_N1 19
SENSORRX/B- 21
+3.3Vtran 23
1 2
3 4
5 6
7 8
9 10
11 12
13 14
15 16
17 18
19 20
21 22
23 24
2 DTU_DCD
4 TRAN_PWR_CN
6 P4.2
8 P5.1
10 P5.3
12 P3.7
14 P3.4
16 P3.2
18 MCURXD0_N2
20 MCUTXD0_N2
22 SENSORTX/A+
24 +3.3Vcoll
+3.3Vtran
+3.3Vcoll
Header2*12
JP3
Vbat
Vcoll
Vbat 1
Vbat 3
5
Vol_Cur+ 7
Res_Sensor+ 9
Pulse2 11
13
IN4- 15
WHITE 17
GREEN 19
BLACK 21
RED 23
1 2
3 4
5 6
7 8
9 10
11 12
13 14
15 16
17 18
19 20
21 22
23 24
2 DGND
4 DGND
6 DGND
8 Vol_Cur-
10 Res_Sensor-
12 Rain2/Pulse1
14 Rain1
16 IN4+
18 WHITE
20 GREEN
22 BLACK
24 RED
DGND
Header2*12
！修改7：JP3-15-18PIN修改
！修改8：JP3-19PIN修改
！修改6：JP2-17-22PIN引脚定义修改
!修改
Title
Size
A4
Number
Revision
Date: 2016/4/19
File: E:\SZDT_Product\..\8_Port.SchDoc
Sheet of
Drawn By:

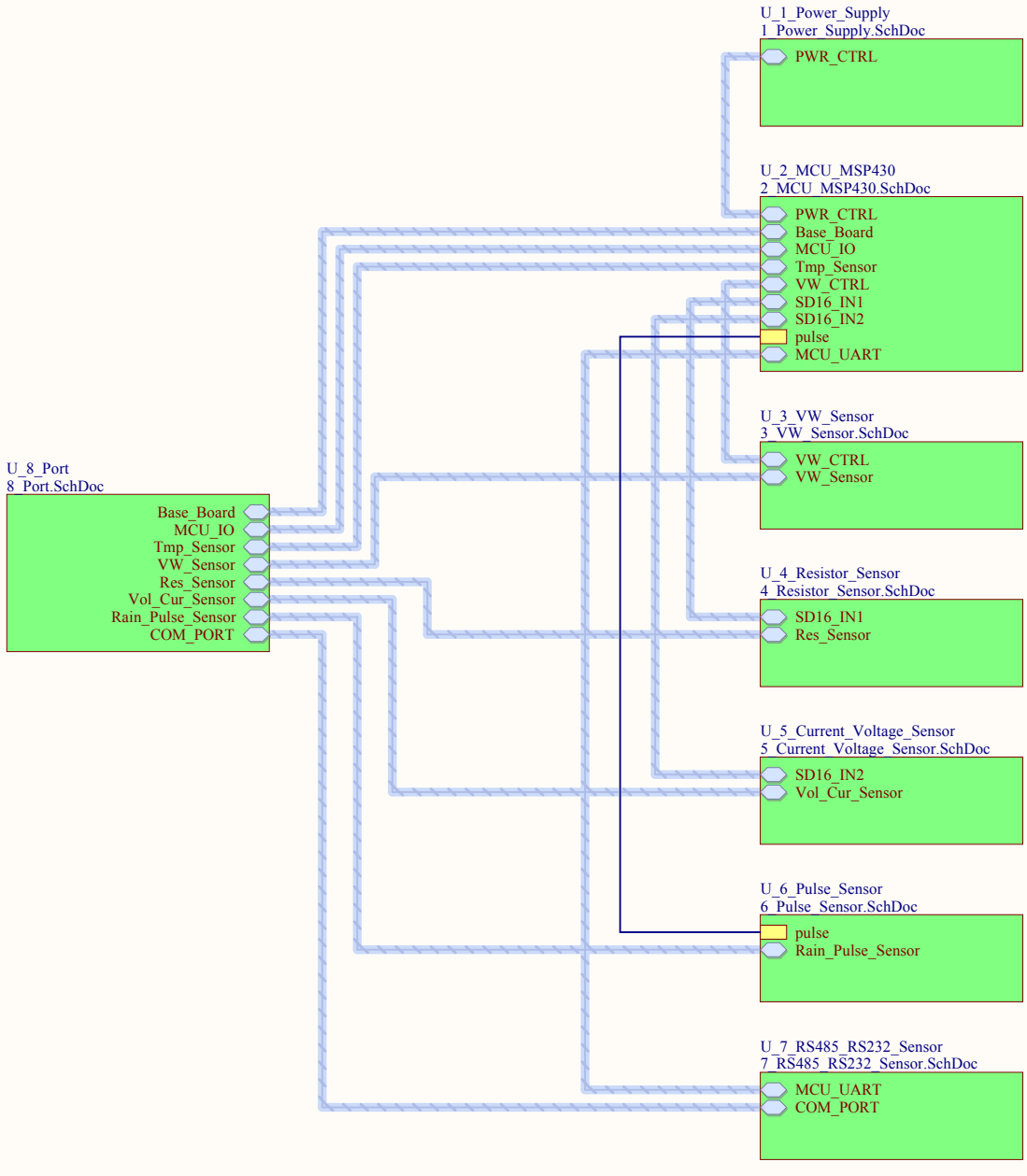

工 程 名:	*
原理图名:	RD15002SCT_Collection.SchDoc
文件版本:	*
绘 制:	*
审 核:	
第 * 页，共 * 页	日 期: 2016/4/19

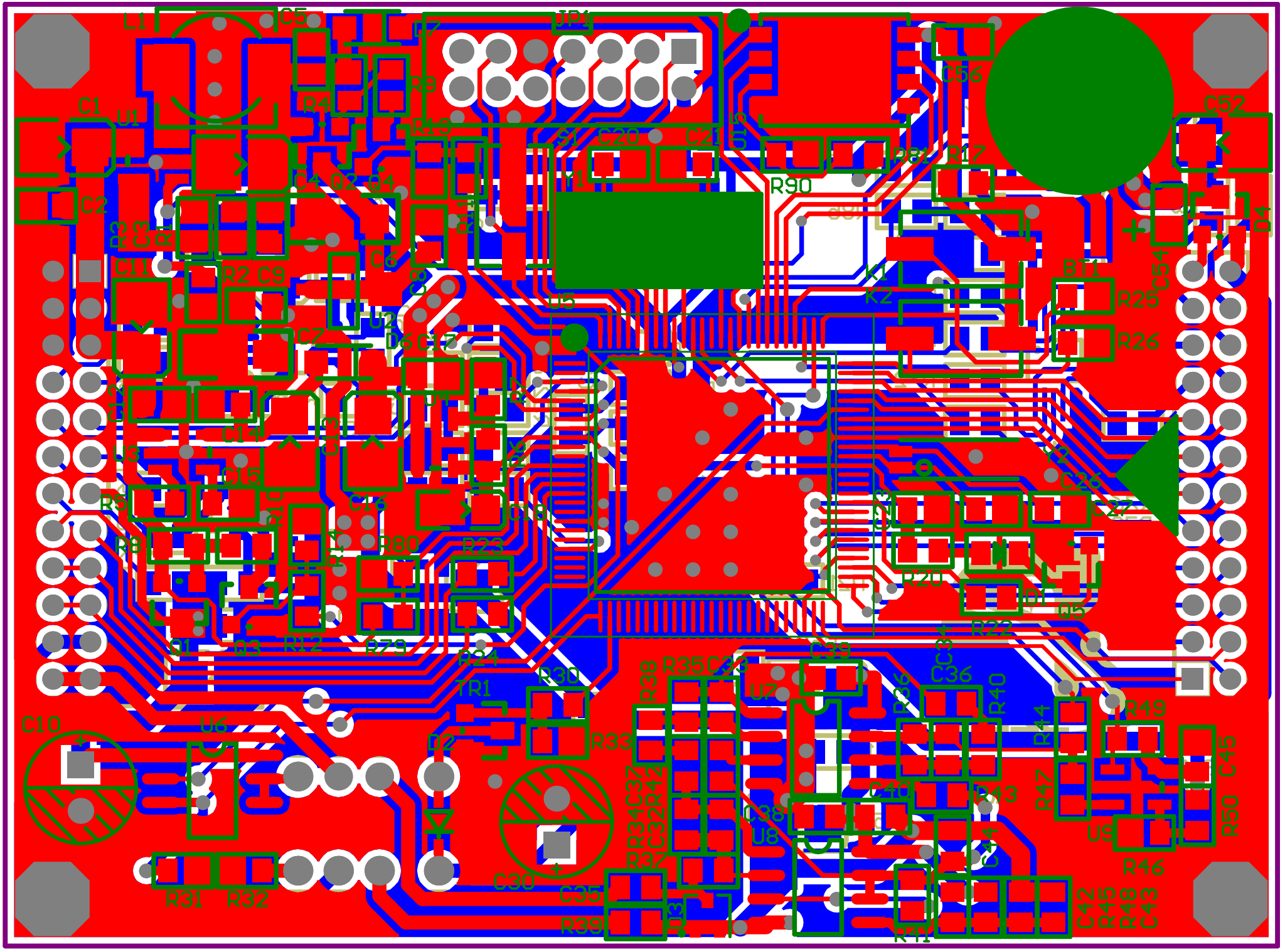

L1
C5
JP4
C1
U1
R9
R4
R10
C20
C21
C56
C52
R90
R12
C2
R3
R14
C11
R2
C8
C6
U2
D6
C7
U5
K1
K2
R25
R26
C14
C15
C16
R8
R7
R6
R5
R23
R20
R22
R1
R3
R12
R29
R24
R30
R35
R36
C29
C36
R40
R44
R49
C10
U6
R33
R34
C37
C32
R42
C38
U8
R43
R47
C45
R50
U9
R46
R37
C30
C35
R39
U3
R41
R31
R32
C42
R45
R48
C43

Comment	Description	Designator	Footprint	LibRef	Quantity
MS920T	Multicell Battery	BT1	MS920T	Battery	1
22uF/16V	Polarized Capacitor (Radial)	C1, C4, C11, C13, C16, C28, C48, C50, C52	CB3528	Cap Pol1	9
0.1uF	Capacitor	C2, C5, C8, C9, C12, C14, C15, C17, C23, C24, C25, C29, C31, C35, C36, C37, C42, C43, C45, C46, C47, C49, C51, C53, C54, C55, C56	CC0603	Cap	27
100pF	Capacitor	C3, C58	CC0603	Cap	2
10uF	Polarized Capacitor (Radial)	C6, C7	CC1206	Cap Pol1	2
100uF/6.3V	Polarized Capacitor (Radial)	C10, C30	EC2.5/6MM	Cap Pol1	2
10uF/16V	Polarized Capacitor (Radial)	C18	CA3216	Cap Pol1	1
33nF	Capacitor	C19	CC0603	Cap	1
22pF	Capacitor	C20, C21, C26, C27	CC0603	Cap	4
1uF	Capacitor	C22, C38, C39, C44	CC0603	Cap	4
330pF	Capacitor	C32, C33, C34	CC0603	Cap	3
10nF	Capacitor	C40, C41	CC0603	Cap	2
22uF/6.3V	Polarized Capacitor (Radial)	C57, C59	CB3528	Cap Pol1	2
LED		D1	D0805	LED	1
CMDSH-3	Schottky Diode	D2	SOD323	D Schottky	1
DESD1P0RFW-7	TVS DIODE,70VVVM,8VC,SOT-323	D3	SOT-323	BAV99WT1G	1
DIODE-CC		D4	SOT-23W	DIODE-CC	1
1N4148		D5	SOD323	DIODE	1
MBR140	Schottky Diode	D6, D7	SOD-123	D Schottky	2
JTAG		JP1	IDC14-2.0MM	Header2*7	1
Header2*12		JP2, JP3	IDC24-2.0MM-INSERT	Header2*12	2
F4		K1	SPST	KEY_1	1
F3		K2	SPST	KEY_1	1
10uH	Inductor	L1	SLF6025	Inductor	1
CJ2301		Q1, Q2	SOT-23W	P-MOSFET1	2
MMBT3904		Q3, Q4, Q5, Q6, TR1	SOT-23W	NPN	5
35.7K	Resistor	R1	CC0603	Res2	1
100K	Resistor	R2, R5, R31, R33, R34, R35, R36, R50, R58, R61, R79	CC0603	Res2	11
10K	Resistor	R3, R13, R14, R16, R30, R49, R81, R82, R83, R89, R90	CC0603	Res2	11
47K 1%	Resistor	R4, R8	CC0603	Res2	2
20K	Resistor	R6, R7, R80	CC0603	Res2	3
47K	Resistor	R9, R10	CC0603	Res2	2
4.7K	Resistor	R11, R12, R37, R38, R40	CC0603	Res2	5
4R7	Resistor	R15	CC0603	Res2	1
22R	Resistor	R17	CC0603	Res2	1
0	Resistor	R18, R19, R21, R23, R24, R27, R55, R56, R64, R66, R68	CC0603	Res2	11
200R	Resistor	R20	CC0603	Res2	1
1K	Resistor	R22, R44, R47, R51, R52, R53, R54, R67	CC0603	Res2	8
12K	Resistor	R25, R26	CC0603	Res2	2
10	Resistor	R28	CC0603	Res2	1
0R	Resistor	R29, R41, R42, R43, R62, R63, R70, R71, R72, R73, R74, R75, R76, R77, R84, R85, R87, R88	CC0603	Res2	18
100	Resistor	R32, R39	CC0603	Res2	2
100K 1%	Resistor	R45, R48	CC0603	Res2	2
49.9K	Resistor	R46, R59	CC0603	Res2	2
49.9K 1%	Resistor	R57, R60	CC0603	Res2	2
3.3K	Resistor	R65	CC0603	Res2	1
470	Resistor	R69	CC0603	Res2	1
120R	Resistor	R86	CC0603	Res2	1
G6K-2P-Y		RE1	G6K	G6K	1
RESET	Switch	S1	SPST	SW-PB	1
TPS560200		U1	SOT-23-5	TPS560200	1
GM6250		U2	SOT-89	GM6250	1
LP2985-3.3		U3	SOT-23-5	LP2985	1
LM4121-ADJ/1.2		U4	SOT-23-5	LM4121-ADJ/1.2	1
MSP430F47126		U5	TQFP100	MSP430F47126	1
FAN3122T		U6	SO-8	FAN3122	1
LT1807		U7, U8	SO-8	LM833N	2
TLV3491AID		U9	SOT-23-5	TLV3491AID	1
AD8237		U10	MSOP8	AD8237	1
PC410		U11	PC410	PC410	1
NALS4684		U12	MS10	NALS4684	1
SN65HVD72/75/78		U13	SO-8	SN65HVD72/75/78	1
74HC1G14		U14	SOT-23-5	74HC1G14	1
SST25VF064C		U15	WSON-8	SST25VF064C	1
1M	Crystal Oscillator	Y1	XCYAI	XTAL	1
32.768KHz		Y2	MC-146	MC-146	1